APPENDIX A – BENTON COUNTY EXISTING LAND USE MAP (2013)

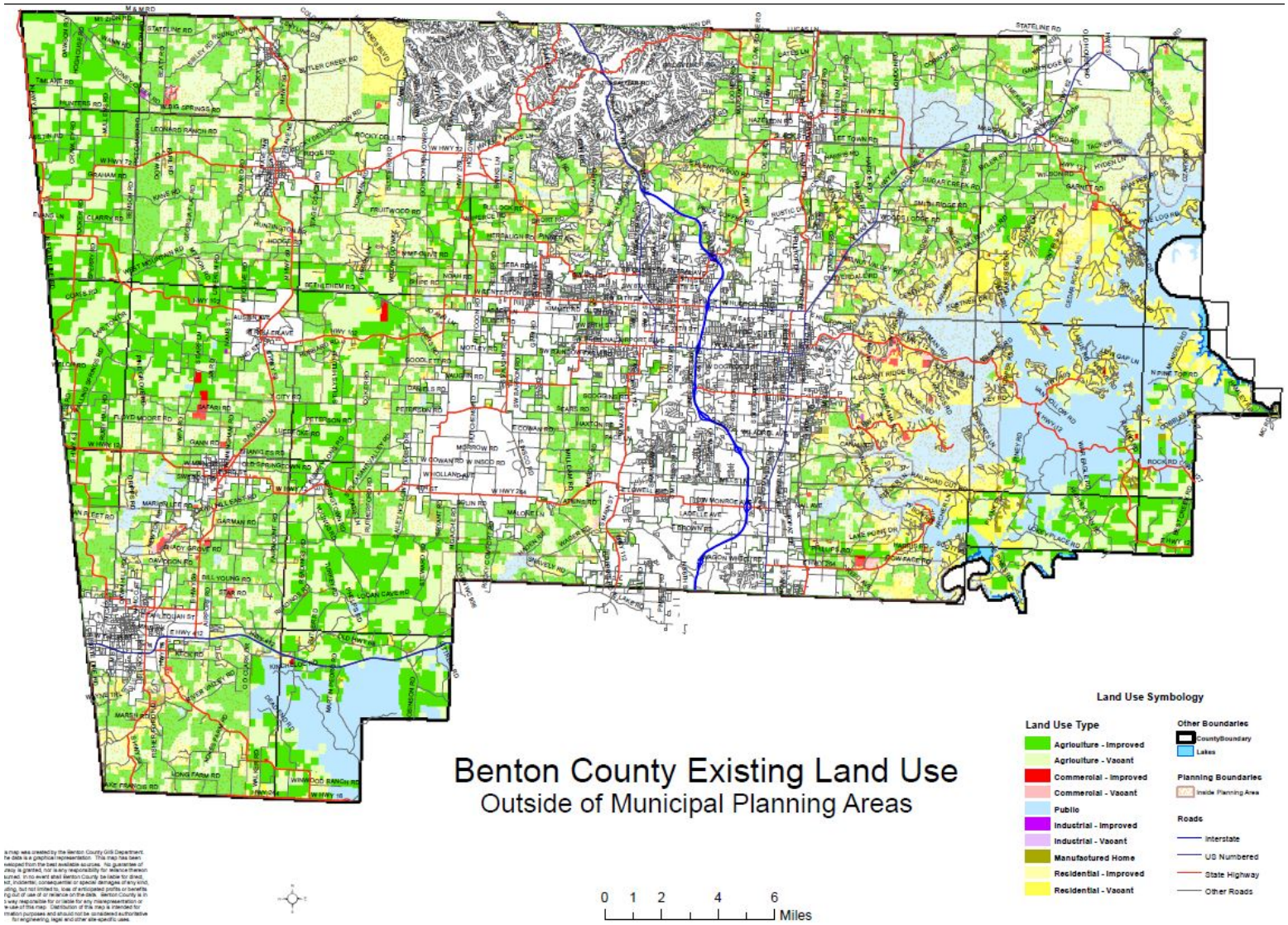

APPENDIX B- LID DESIGN ALTERNATIVES

Example: Community Design – Single Family Homes

Conventional Subdivision Design: Roads and lots are placed on the land with no regard to the existing hydrologic patterns or forested areas. Stormwater will be managed through conventional methods.

Low Impact Subdivision Design: Roads, Lots, and open space are designed around the existing forested areas and drainage patterns.

APPENDIX B- LID DESIGN ALTERNATIVES

Example: Low Impact Lot Design

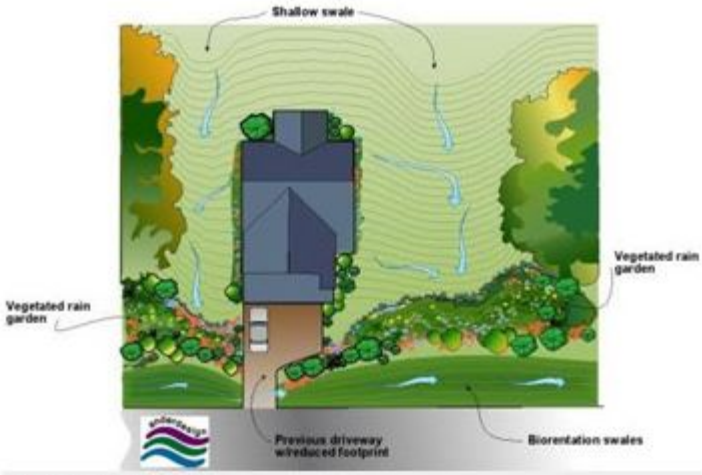

Fig. 17: LID lot design
Images courtesy Pierce County, Washington and AHBL, Inc.

Individual lots are designed to manage stormwater through the use of rain gardens, swales, bioretention cells, pervious driveways, and conservation areas.

Example: Rain Garden

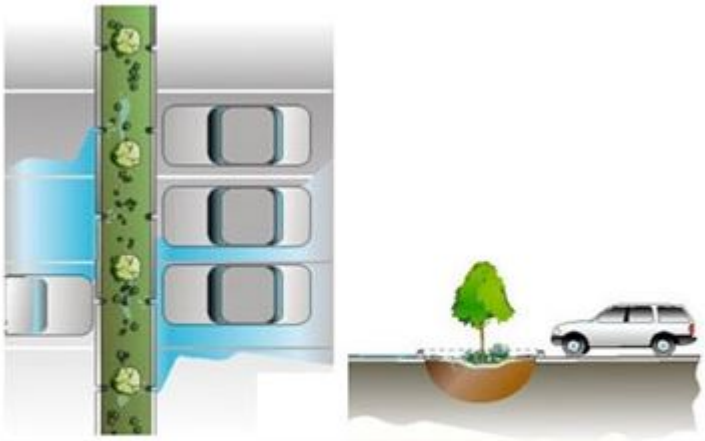

Fig. 19: Bioretention cell schematic
Courtesy Pierce County, Washington and AHBL, Inc.

Rain gardens are designed as natural treatment systems in the form of recessed landscaped areas. They contain specialized soil mixtures, an aggregate base, an underdrain, and site-appropriate plant materials that tolerate all weather conditions.

Source: LID Design Manual-University of Arkansas Community Design Center

APPENDIX B- LID DESIGN ALTERNATIVES

Example: Permeable Surfaces

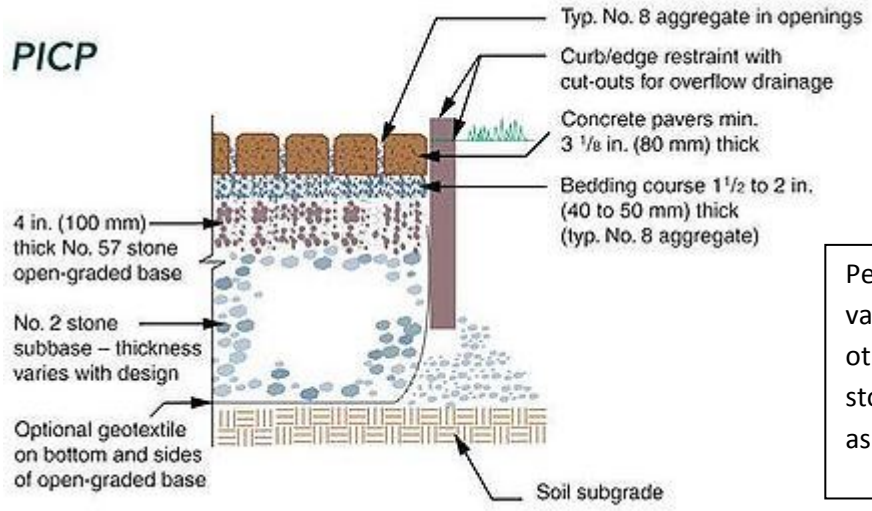

Permeable surfaces consist of a variety of pavement, pavers, and other devices that provide stormwater infiltrations while serving as a structural surface.

Example: Curb Alternatives

Curbing can be designed to direct stormwater runoff into existing bio retention areas.

Source: LID Design Manual-University of Arkansas Community Design Center

APPENDIX C - LIST OF SUGGESTED NATIVE VEGETATION

WILDFLOWERS (FORBES)

Common Name	Botanical Name	Planting Zone	Height	Bloom Time	Bloom Color
Sweet Flag	Acorus calamus	Ponding to middle	2'	May-Jul	Green
Yellow Giant Hyssop	Agastache nepetoides	Ponding to high	6'	Jul-Oct	Cream
Arkansas Blue Star	Amsonia	Middle to berm	4'	April-May	Blue
New England Aster	Aster novae-angliae	Ponding to middle	6'	Aug- Oct	Purple
Wild columbine	Aquilegia canadensis	Middle to berm	8-24"	May-Jun	Red & yellow
Swamp milkweed	Asclepias incarnata	Ponding to middle	2-4'	Jul-Sep	Pink-red
Butterfly milkweed	Asclepias tuberosa	High	1.5-3'	Jul-Aug	Orange
Sti Aster	Aster linariifolius	High to berm	1'	Aug-Oct	Purple
Purple Poppy Mallow	Callirhoe involucrata	High to berm	6"	Jun-Aug	Purple
Wild Hyacinth	Camassia scilloides	Ponding to high	2'	May-Jun	White
Tickseed	Coreopsis verticillata	Middle to berm	18"	Summer	Yellow
Swamp Loosestrife	Decodon verticillatus	Ponding	2'	June-Sept	Pink
Wild Blue Larkspur	Delphinium carolinianum	Middle to high	4'	May-Jun	Blue
Midland Shooting Star	Dodecatheon meadia	Ponding to high	1'	Apr-Jun	Pink
Narrow-leaved Coneflower	Echinacea angustifolia	High	2'	Jun-Jul	Pink
Purple Coneflower	Echinacea purpurea	Ponding to high	4'	Jul-Sep	Purple
Robin's Plantain	Erigeron pulchellus	High to berm	1'	May-Jun	White
Rattlesnake Master	Eryngium yuccifolium	Ponding to high	4'	Jul-Sep	White
Joe Pye weed	Eupatorium fistulosum	Ponding to middle	To 6'	Summer	Pink-Purple
Boneset	Eupatorium perfoliatum	Ponding	4'	Jul-Sep	White-Pink
Rose Mallow	Hibiscus militaris (laevis)	Ponding	5'	Jul-Sep	Pink
Dwarf Crested Iris	Iris cristata	Ponding to high	8"	May	Purple
Prairie Blazing Star	Liatris pycnostachya	Middle to berm	3-4'	July-Oct	Purple
Cardinal flower	Lobelia cardinalis	Ponding	4'	Jul-Sep	Scarlet
Great blue lobelia	Lobelia siphilitica	Middle to high	3-4'	Aug-Sep	Blue
Fringed Loosestrife	Lysimachia ciliata	Ponding to middle	2'	Jun-Aug	Yellow
Virginia bluebell	Mertensia virginica	Ponding to middle	2'	Apr-May	Blue
Wild Bergamot	Monarda fistulosa	Ponding to high	4'	Jul-Sep	Purple
Wood Betony	Pedicularis canadensis	Ponding to berm	1'	Apr-May	Yellow
Foxglove Beardtongue	Penstemon digitalis	Ponding to middle	2-3'	Jun-Jul	White
Wild Blue Phlox	Phlox divaricata	Ponding to berm	1'	Apr-Jun	Blue
Garden Phlox	Phlox paniculata	Ponding to middle	4'	Jul-Sep	Pink
Obedient Plant	Physostegia virginiana	Ponding to middle	4'	Aug-Sep	Pink
Yellow Coneflower	Ratibida pinnata	Ponding to middle	3-6'	Summer	Yellow
Black-eyed Susan	Rudbeckia hirta	Middle to berm	2'	Jul-Sep	Yellow
Thin-leaved Coneflower	Rudbeckia triloba	Middle to high	3'	Aug-Sep	Yellow
Blue Sage	Salvia azurea	Middle to high	3'	Aug-Sep	Blue
Mad-dog Skullcap	Scutellaria lateriflora	Ponding	2'	Jul-Sep	Blue
Starry Campion	Silene stellata	Ponding to high	3'	Jul-Oct	White
Sti Goldenrod	Solidago rigida	Ponding to high	4'	Aug-Oct	Yellow
Ohio Spiderwort	Tradescantia ohiensis	Ponding to berm	3'	May-Jul	Blue
Spiderwort	Tradescantia virginica	Middle	3'	Apr-Jul	Purplish blue
Blue Vervain	Verbena hastata	Ponding	5'	Jul-Sep	Blue
Ironweed	Vernonia sp.	Ponding to middle	5'	Aug-Oct	Purple

APPENDIX C - LIST OF SUGGESTED NATIVE VEGETATION

FERNS

Common Name	Botanical Name	Planting Zone	Height	Bloom Time	Bloom Color
Lady Fern	Athyrium filix-femina	Ponding to middle	1'		
Sensitive Fern	Onoclea sensibilis	Ponding	1'		

TREES

Common Name	Botanical Name	Planting Zone	Height	Bloom Time	Bloom Color
Allegheny Serviceberry	Amelanchier laevis	Ponding to berm	25'	Apr-May	White
River Birch	Betula nigra	Ponding to middle	50'		
Redbud	Cercis canadensis	Middle to berm	15'	April-May	Pink

GRASSES & SEDGES

Common Name	Botanical Name	Planting Zone	Height	Bloom Time	Bloom Color
Little Bluestem	Andropogon scoparius	Middle to berm	3'		
Side-oats Grama	Bouteloua curtipendula	Middle to berm	2'		
Common Bur Sedge	Carex grayi	Ponding to middle	3'		
Common Fox Sedge	Carex stipata	Ponding to middle	3'		
Common Tussock Sedge	Carex stricta	Ponding	3'		
Common Cattail Sedge	Carex typhina	Ponding	1'		
Common Rush	Juncus effusus	Ponding to middle	2'		
Switchgrass	Panicum virgatum	Ponding to middle	3'		
Indian Grass	Sorghastrum nutans	Middle to berm	6'		
Prairie Dropseed	Sporobolus heterolepis	Middle to berm	3'		

SHRUBS

Common Name	Botanical Name	Planting Zone	Height	Bloom Time	Bloom Color
False Indigo	Amorpha fruticosa	Ponding to high	12'	Jun-Aug	Purple
New Jersey Tea	Ceanothus americanus	Middle to berm	3'	Jun-Aug	White
Buttonbush	Cephalanthus occidentalis	Ponding	15'	Jun-Aug	White
Red Osier Dogwood	Cornus stolonifera	Ponding to middle	10'	Jun-Sep	White
Ozark Witch Hazel	Hammamelis vernalis	Middle to berm	10'	Jan-April	Yellow
Inkberry	Illex glabra	Middle to berm	3-4'	Evergreen	Green
Winterberry Holly	Illex verticillata	Ponding to berm	6-8'	May-Jun	White
Yaupon	Ilex vomitoria	Middle to berm	15'	Evergreen	
Prairie Ninebark	Physocarpus opulifolius	Ponding to high	8'	Jul	White
Arrowwood Viburnum	Viburnum dentatum	Ponding to high	16'	Jun-Aug	White
Blackhaw	Viburnum prunifolium	Ponding to high	16'	May-Jun	Cream
American Cranberry Bush	Viburnum trilobum	Ponding to middle	12'	May-Jun	White

APPENDIX D – STORMWATER MANAGEMENT BEST MANAGEMENT PRACTICES

Introduction

Effects of Urbanization

Urban development alters the hydrology of watersheds and streams by disrupting the natural water cycle. Impacts include:

- Runoff volumes increase up to 50 percent over pre-developed volumes.
- Peak runoff discharges increase two to five times pre-developed discharges.
- Runoff velocities increase.
- Time of concentrations decrease.
- Frequency of bankfull and near bankfull events increase.
- Flooding increases.
- Dry weather flows (baseflow) decrease.

These changes in the hydrology of the area translate into the changes shown in the typical hydrograph presented in Figure 1.

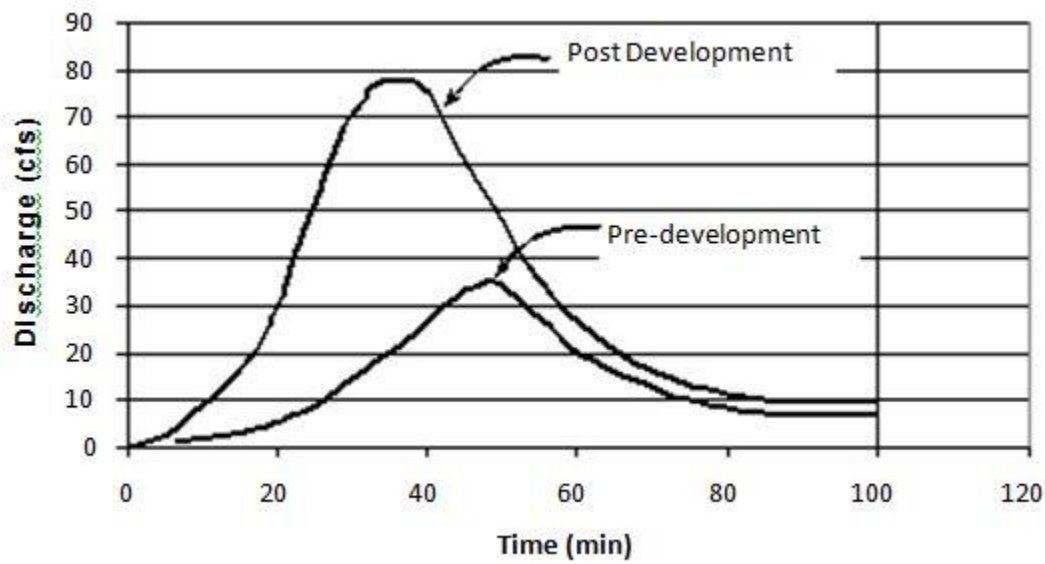

Figure 1. Effect of development on stormwater discharge rates.

Sources of Pollutants

Urbanization increases the amount of sediment, nutrients, microbes, organic matter, toxic pollutants, and trash in stormwater flows.

Sediment in water (suspended solids, dissolved solids, and/or turbidity) is the cause of:

- Filling of lakes and reservoirs
- Stream turbidity
- Habitat changes
- Recreation/aesthetic loss
- Transport of other contaminants

Nutrients in water (nitrate, nitrite, ammonia, organic nitrogen, phosphate, and total phosphorus) are the cause of:

- Algae blooms
- Eutrophication
- Ammonia Toxicity to aquatic life
- Nitrate Toxicity

Microbes in water (Total and Fecal Coliform, Fecal Streptococci, Viruses, E.Coli, Enteroccus) can be the cause of:

- Gastrointestinal diseases
- Ear/Intestinal infections
- Shellfish bed closure

Organic Matter (vegetation, septic tank overflows, pet waste) in water is the cause of:

- Dissolved oxygen depletion
- Odors
- Fish kills

Toxic Pollutants (heavy metals such as cadmium, copper, lead, zinc, organics, hydrocarbons, pesticides/herbicides) can be the cause of:

- Human & aquatic toxicity
- Bioaccumulation in the food chain
- Thermal Pollution Dissolved oxygen depletion
- Habitat changes

Trash and debris cause:

- Recreation loss
- Aesthetic loss

CONSTRUCTION BMPs

An Ounce of Prevention is Worth a Pound of Cure

Construction BMPs fall into two categories, erosion control and sediment control. Erosion control is the protection of the soil surface from the impact of rain drops and the resulting detachment of soil particles. Sediment control is the practices that capture soil particles that have been detached and transported down slope. It is far more efficient and cost effective to prevent erosion than to capture sediment.

Design Methodology and BMP Selection Criteria

Construction BMPs are typically designed for erosion control, sediment control, or control of wastes (hazardous, solid, etc.). For the best results, BMPs should be used in series with one or more BMPs. The operator of the construction site should concentrate efforts on erosion control; but, provide sediment control backup BMPs. A listing of construction erosion and sediment control BMPs and the benefits each provides is Shown in Table 1. Further information on each BMP is presented in the following sections of this chapter.

Table 1. Construction BMP characteristics chart

	Quantity		Quality			
Construction BMP	Flow atten-uation	Runoff volume reduction	Erosion Control	Sediment control	Nutrient loading (N,P)	Organic loading
Minimize Clearing & Compaction	⊙	○	●	○	⊙	⊙
Construction Sequencing	⊙	○	●	●	⊙	⊙
Construction Entrance	⊙	⊙	⊙	●	⊙	⊙
Interceptor Swale & Dike	⊙	⊙	●	●	⊙	⊙
Slope Drain	⊙	⊙	●	○	⊙	⊙
Energy Dissipation - Riprap Apron	⊙	⊙	●	⊙	⊙	⊙
Soil Roughening	○	○	●	●	⊙	⊙
Chemical Stabilization	○	○	●	●	○	○
Mulch	⊙	⊙	●	⊙	⊙	⊙
Erosion Control Mats	⊙	⊙	●	⊙	⊙	⊙
Vegetation	○	○	●	●	○	○
Embedded Silt Fence	○	○	○	●	⊙	⊙
Inlet Protection	⊙	⊙	○	●	⊙	⊙
Sediment Trap	●	●	○	●	○	○
Check Dams	●	○	○	●	⊙	⊙

● - Primary benefit ○ - Secondary benefit ⊙ - Little or no benefit

CONSTRUCTION PLANNING

Minimize Clearing and Compaction

Description

Clearing of natural vegetation and vehicular traffic on the site will expose and compact soils causing erosion and greater amounts of runoff.

Minimization of Clearing and Compaction will decrease the amount of soil exposed to erosion and will decrease the amount runoff from due to compacted soil.

Applicability

Existing vegetation can often be incorporated into the design and construction of a development lessening the amount of bare soil exposed to rain and wind. Compacted soil does not allow for adequate infiltration of precipitation, therefore increasing runoff quantities and flowrates. Increased flowrates increase erosion and sediment transport.

Design Criteria

Landscaping and clearing requirements vary from project to project. Vehicular traffic within the construction site should be limited and confined to areas that are protected with adequate sediment control practices.

Limitations

Some native plants and grasses are not considered appropriate for developed sites; so, non-native grasses and plants would need to be planted.

Maintenance Requirements

Maintenance of protective fencing as needed.

CONSTRUCTION SEQUENCING

Description

Exposing soil before required for construction can expose the soil to erosion for an extended period.

Construction Sequencing coordinates land disturbing activities with construction requirements to minimize the amount of soil exposed to erosion at any time.

Applicability

Only land needed for building activities and vehicular traffic should be cleared. Projects on larger sites and on projects that land disturbing activities can be phased are best suited for construction sequencing.

Design Criteria

Areas of the site to be preserved should be clearly marked on the plans and delineated on the site. The timing of clearing and access to different areas of the site should be indicated in the contract documents.

Limitations

Sometimes, smaller projects do not lend themselves to sequencing of land disturbing activities.

Maintenance Requirements

Maintenance of protective fencing as needed.

RUNOFF AND RUN-ON CONTROL BMPs

Construction Entrances

Description

Mud and sediment carried off-site on the tires of equipment and vehicles will be deposited on the neighboring streets. This sediment will end up in the local streams if not swept up.

Construction Entrances are systems that clean vehicles of mud, sediment, and aggregate prior to leaving the site.

Applicability

Any entrance/exit of a construction site.

Design Criteria

A six inch layer of washed gravel or round stone (greater than 1 inch) can be used to stabilize construction site entrances. The stabilized entrance should be at least 50 feet long. The entrance should be as long as the longest vehicle that will enter the site. If larger volumes of traffic are expected, a two-lane entrance is appropriate.

Other methods of removing mud from vehicles are wheel wash facilities (dunk or mechanical) and rubble strips (cattle guard, logs, etc.).

A dunk wheel wash is a water filled, stabilized (1 inch or greater gravel or stone) pit. The water depth should be at least two feet deep and the pit should be at least 20 foot long. The pit should be two vehicle lengths from the construction site exit and the entrance and exit to the pit should be stabilized.

Limitations

In order to avoid puncturing tires, stabilized entrances should not be constructed with sharp edge stones.

Maintenance Requirements

Stabilized entrances require periodic cleaning or addition of stone as the voids in the stones fill with mud and sediment.

Wheel wash facilities and rubble strips will need to be cleaned as the pits fill in order to provide more room to store new mud and sediment.

The street in front of the entrance should be cleaned as required to remove sediment that has been tracked off site.

INTERCEPTOR SWALE & DIKE

Description

Water running onto the site will increase erosion and be a nuisance to construction activities. Additionally, runoff from the construction site can have excessive amounts of sediment that can end up in local streams.

Interceptor Swales and Dikes are diversion systems used to divert runoff around a site or to direct runoff from a site to a pond in order to settle out sediment prior to discharge from the site.

Applicability

Any area that that is subject to runoff from uphill drainage areas.

Design Criteria

The swale (channel) and dike should be situated to capture runoff uphill of the work area with a vegetative buffer uphill of the swale to remove sediment before it enters the swale. The stabilized swale and ditch should be in-place prior to all other earth work on the project. The channel should be designed to handle the 10-year storm, with the bottom and sides protected for the anticipated water velocity. Typically, the ditch will be two foot wide at the bottom and six foot wide at the top. Maximum water velocity in the swale should not exceed five feet per second. Side slopes should be no steeper than 1:3 (vertical:horizontal). Energy dissipation should be provided at the exit from the swale as needed.

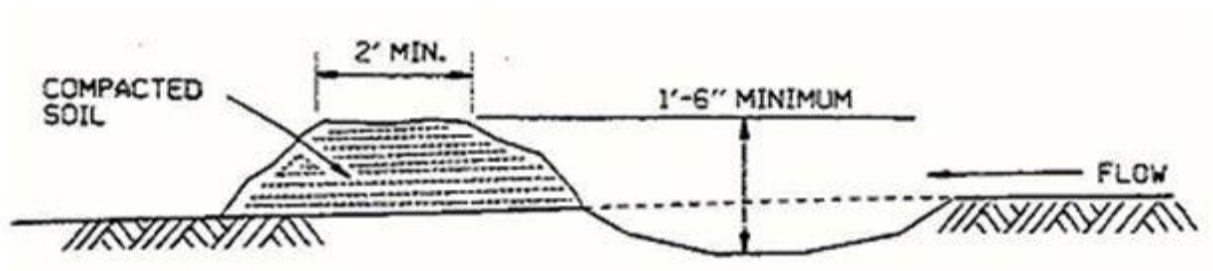

Figure 2. Swale configuration detail (Source: AHTD, 2001)

Limitations

Excessive flowrates can cause scour in the swale; therefore requiring a sediment control pond at the end of the swale.

In the event that the dike over flows during larger storm events, the site can be damaged and excessive erosion and sediment transport can occur.

Maintenance Requirements

The swale should be cleared of debris and excessive vegetation as required.

SLOPE DRAIN

Description

Gullying and excessive erosion will take place on slopes subjected to concentrated flows of runoff.

Slope Drains are conduits (open or closed) used to direct water down a slope while protecting the slope from erosion.

Applicability

Slopes with the potential for intended or unintended concentrated flows

Design Criteria

Slope drains (rundowns, pipe slope drains, etc.) should be placed where runoff from uphill drainage areas will concentrate. Slope drains should be sized to handle a 10 year storm from an area no greater than five acres. Minimum size for a pipe slope drain is 12 inch diameter. Slope rundowns (stone or riprap lined channels) should be constructed with the middle sufficiently lower than the sides to ensure flow stays in the rundown. Slope drains operate best when used in conjunction with interceptor swales and dikes on the top of the slope. Appropriate energy protection should be placed at the outlet of the pipe.

Limitations

For larger storms, the slope drain may not operate properly and can cause excessive gullying and slope erosion as well as damage to the construction site. Slope drains that are improperly designed or constructed such that the flow does not stay in the drain will cause excessive erosion.

Maintenance Requirements

Slope drains should be inspected weekly and kept clear of trash, debris, and vegetation.

ENERGY DISSIPATION - RIPRAP APRONS

Description

Water exiting a channel, swale, pipe, or culvert (any water carrying conduit) typically is in a concentrated stream with a relatively high velocity. This high energy stream of water erodes unprotected soil.

Energy Dissipation is a structural BMP placed at the exit of a water carrying conduit to slow the velocity and decrease the turbulence of the water. Permanent energy dissipation controls can be used during the construction phase of the project, and should be designed according to methods described in the Residential and Commercial BMPs section of this manual.

Applicability

All channels or pipes carrying runoff at velocities that will erode the soil in the discharge area.

Design Criteria

Determine the required median size (d50) of riprap using graph in Figure 3 below. Enter the graph on the X-axis with the discharge in cubic feet per second, move vertically to intersect either the appropriate depth of flow (d) line or the velocity of flow (v) line, then read to the horizontally to Y-axis on the right side to determine the required median diameter of riprap (d50).

Determine the minimum required apron length using the graph in Figure 3. Enter the graph on the X-axis with the discharge in cubic feet per second, move vertically to the second set of lines to intersect the appropriate depth of flow (d), then read horizontally to the left to determine the minimum required length of apron (La) in feet.

Limitations

Riprap aprons are best suited for applications where the Froude Number at the conduit exit is less than 2.5.

Some Communities do not allow riprap as a permanent control method of energy dissipation.

Maintenance Requirements

The apron should be inspected after large storms to ensure that the riprap is in place. riprap should be replaced when it is dislodged or missing.

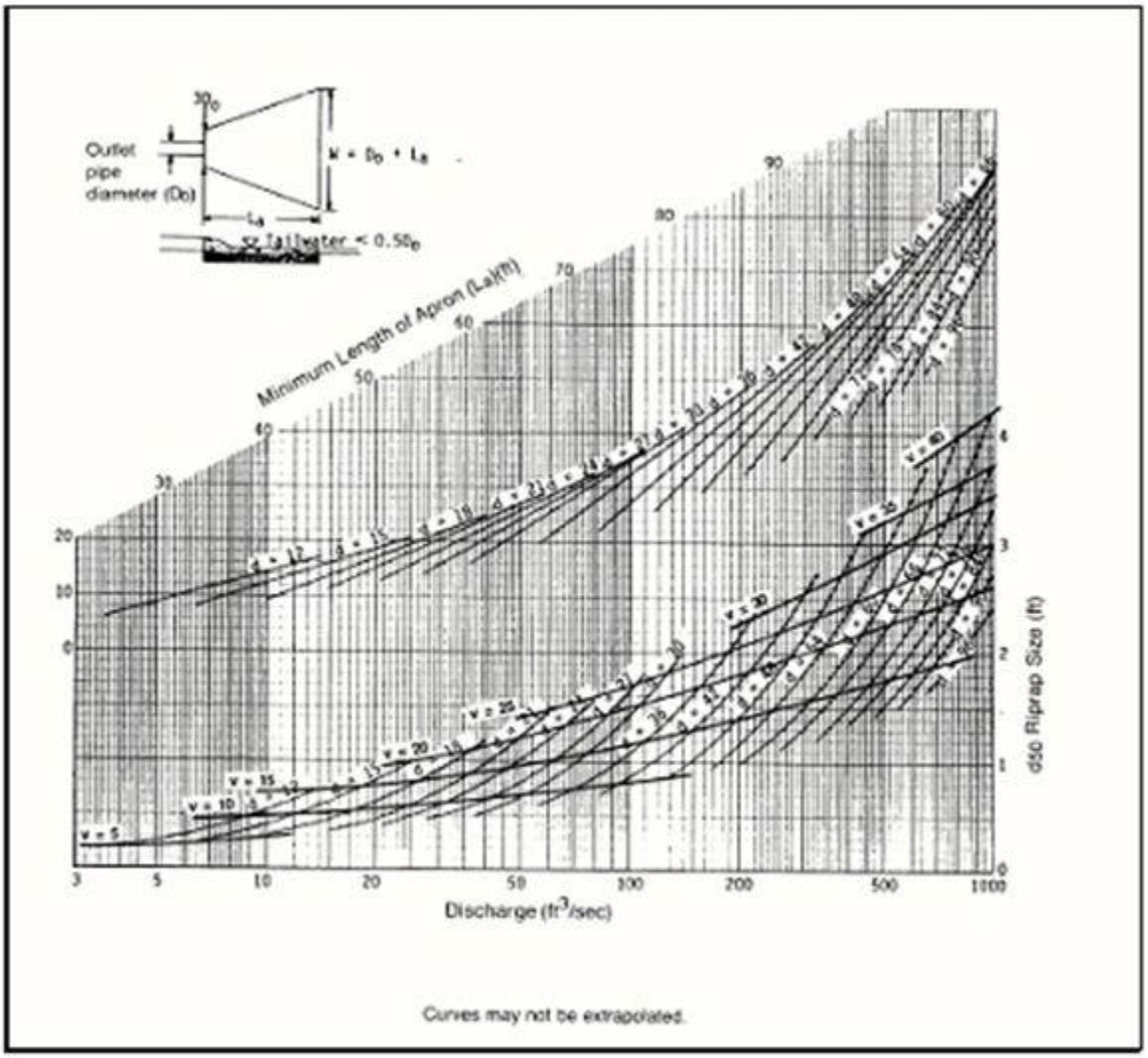

Figure 3. Riprap apron sizing. (SCS, 1975)

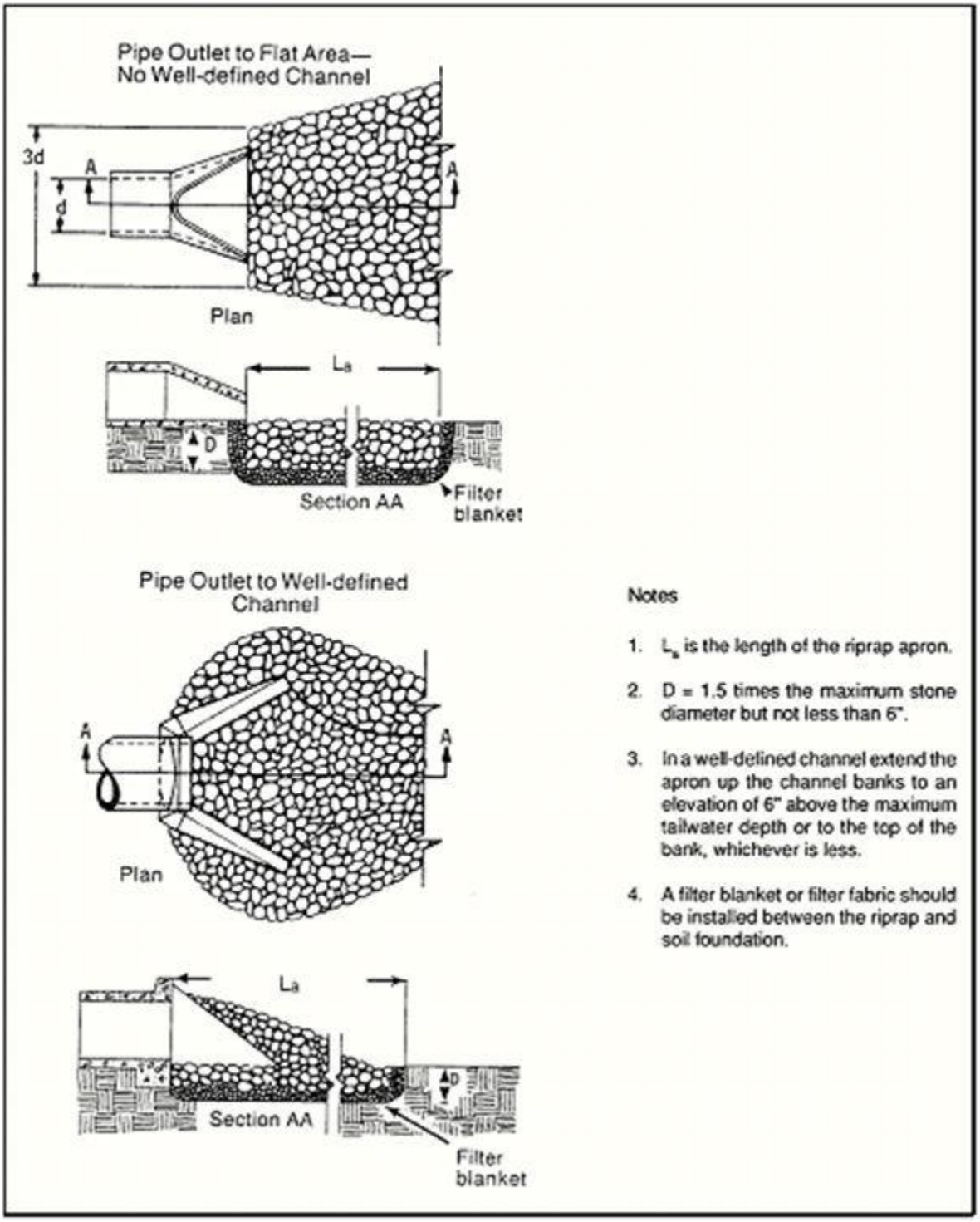

Figure 4. Riprap apron detail. (Source: MESCG, 1996)

EROSION CONTROL BMPs

Soil Roughening

Description

Water flowing down a bare slope will erode soil and transport soil to the bottom of the slope.

Soil Roughening is the practice of increasing the roughness of exposed soil by making grooves, tracks, or terraces (stair-steps) which run perpendicular to the flow path (parallel to slope) slowing flow and trapping sediment.

Applications

Soil roughening can be used on a wide variety of slopes and in conjunction with seeding and mulching.

Design Criteria

Tracking with lugged tracked equipment is appropriate on sandy material so as to not excessively compact the soil.

Grooving can be accomplished using a plow with the furrows three inches deep and less than 15 inches apart.

Terraced (stair-stepping) slopes should have the vertical cuts no more than two feet deep and the horizontal steps should be wider than the depth of the vertical cut. The horizontal step should slope backward to the vertical cut upslope on the hill.

The slope should be seeded immediately after roughening and mulch or chemical stabilization should be utilized where appropriate.

Limitations

Soil roughening should not be used on rocky soils or soils that are high in clay content. Tracking may cause excessive compaction which can lead to greater erosion

Maintenance Requirements

Roughened slopes should be inspected after ½ inch and greater storms and problem areas noted. After a rain event, slopes may need reconstruction, re-roughening, reseeding, and remulching.

CHEMICAL STABILIZATION

Description

Erosion is caused by rainfall impact detaching soil particles and runoff carrying the particles downslope. *Chemical Stabilization* is the practice of spraying chemicals (tackifiers, soil binders) on the soil to hold the soil particles in place and protect against erosion.

Applicability

Areas that have been cleared of vegetation or do not have a protective cover on the soil. If temporary seeding cannot be used or would not be effective due to the time of year, steepness of slope, or other reasons, chemical stabilizers can be applied to protect against erosion. Chemical stabilization can be used in conjunction with seeding and mulching.

Design Criteria

The type of chemical used (asphalt emulsion, polyacrylamides (PAM), vinyl, or rubber), the application rate, and application method should meet the manufactures recommendations.

Limitations

Improper application methods or rates can result in over application which can diminish infiltration and cause additional runoff.

Maintenance Requirements

Chemically stabilized areas should be inspected regularly and after ½ inch or greater rainfalls and stabilizer reapplied as required.

MULCHING

Description

Erosion is caused by rainfall impact detaching soil particles and runoff carrying the particles downslope. Mulch can be applied to the area to hold the soil particles in place and protect against erosion.

Mulching is the practice of applying a layer of organic material (hay, straw, wood fiber, paper fiber, etc.) to protect the soil from impact of precipitation.

Applicability

Areas that have been cleared of vegetation or do not have a protective cover on the soil. Mulches are typically used to protect areas that have been seeded. Mulching can be used in conjunction with chemical stabilization.

Design Criteria

Straw mulch should be evenly applied at a rate of 2 tons of dry straw per acre. The mulch should be crimped into the soil immediately after application. Mulch should not be applied in areas with concentrated flows or on steep slopes.

Mulch is typically applied using a mulch blower; but, can be applied by hand in small or hard to reach areas.

Limitations

Wind and concentrated water flows can blow or wash mulch from the application area.

Maintenance Requirements

Mulched areas should be inspected regularly and after ½ inch or greater rainfalls and mulch reapplied as required.

EROSION CONTROL MATS

Description

Erosion is caused by rainfall impact detaching soil particles and runoff carrying the particles downslope. *Erosion Control Mats* can be applied to the area to hold the soil particles in place and protect against erosion.

Erosion control mats are manufactured blankets of netting with organic filler or geosynthetic material used to protect the soil from impact of precipitation.

Applicability

Areas that have been cleared of vegetation or do not have a protective cover on the soil. Erosion control mats are typically used to protect short steep slopes or in areas of concentrated water flows.

Design Criteria

There are many different types of erosion control mats and each is made for different situations (slope, duration of protection, amount of protection, soil, degradability of mat, etc.); therefore, the type of erosion control mat used and the installation methods should meet the manufactures recommendations.

Limitations

If not properly installed (anchored to the ground and overlapped on the edges), erosion control mats can be washed downslope.

Maintenance Requirements

Areas with erosion control mats should be inspected regularly and after ½ inch or greater rainfalls and problem areas corrected as required.

VEGETATION

Description

Erosion is caused by rainfall impact detaching soil particles and runoff carrying the particles downslope. *Vegetation* (seeded or sodded) can hold the soil particles in place and protect against erosion.

Applicability

Any area of a construction site that the natural vegetation has been removed. Seeding or sodding can be used as a temporary or a final erosion control measure. A substantial savings can be realized by completing the earth work for an area and implementing final vegetative stabilization.

Design Criteria

The type temporary vegetation appropriate for a site is dependent upon the time of year. Prior to application of seed, grading of the site should be complete including all erosion and sediment control practices. If the soils have become compacted, they should be loosened to a depth of at least six inches. If the pH of the soil is less than 6, lime should be added to the top six inches of soil. Fertilizer (10-10-10) should also be incorporated into the top six inches of soil at a rate of 100 lb/acre. Soil roughening techniques should be used for slopes greater than 3:1 (33%). The seed bed should be loose, without large clods, and uniform before seeding. Typical broadcast rates for temporary vegetation are given in Table 2.

Table 2. Temporary seeding planting materials, application dates, planting rates, and characteristics. (Adapted from MAACD, 1998)

Species	Planting Dates		Rate (lb/acre) 80	Plant Characteristics
Oats	2/1 - 5/30	8/1 - 9/30		not cold tolerant
Rye/Wheat	1/1 - 5/31	7/15 - 11/15	90 / 120	cold tolerant
Millet/Sudan grass	5/1 - 8/15	-	45 / 60	warm season
Annual Ryegrass	1/1 - 5/31	7/15 - 9/30	75	not heat tolerant
Annual Lespedeza plus Tall Fescue	5/1 - 8/15	-	15 / 45	warm season

Limitations

Vegetation is not appropriate for heavily trafficked areas (vehicular and pedestrian) and is not appropriate for rocky, gravelly, or course grained soils. For these types of soils, apply six inches of clean topsoil before seeding.

Maintenance Requirements

Vegetated areas should be protected from runoff from adjacent areas and traffic (vehicular and pedestrian). Until established, the vegetation will require fertilization and water.

SEDIMENT CONTROL BMPs

Embedded Silt Fence

Description

Water flowing in sheet or shallow flow will carry sediment down a slope and off-site.

Embedded Silt Fence (ESF) is a barrier made of geotextile fabric placed along a contour to capture water, slow the flowrate, trap sediment, and allow water to filter through the fabric.

Applications

Small drainage areas with sheet flow or shallow flow.

Design Criteria

Embedded silt fence (ESF) should be placed on a contour and designed to hold runoff from the 10 year storm from an area of 100 sq. ft. for each foot of fence. The maximum depth of retained water on the upstream side of the fence should be two feet. The maximum slope length above the fence should be no more than 100 feet. The maximum slope above the fence is 1:1.

The fabric shall be buried in a trench that is at least eight inch deep and eight inches wide as shown below. The fabric shall be place on the upstream side of the posts.

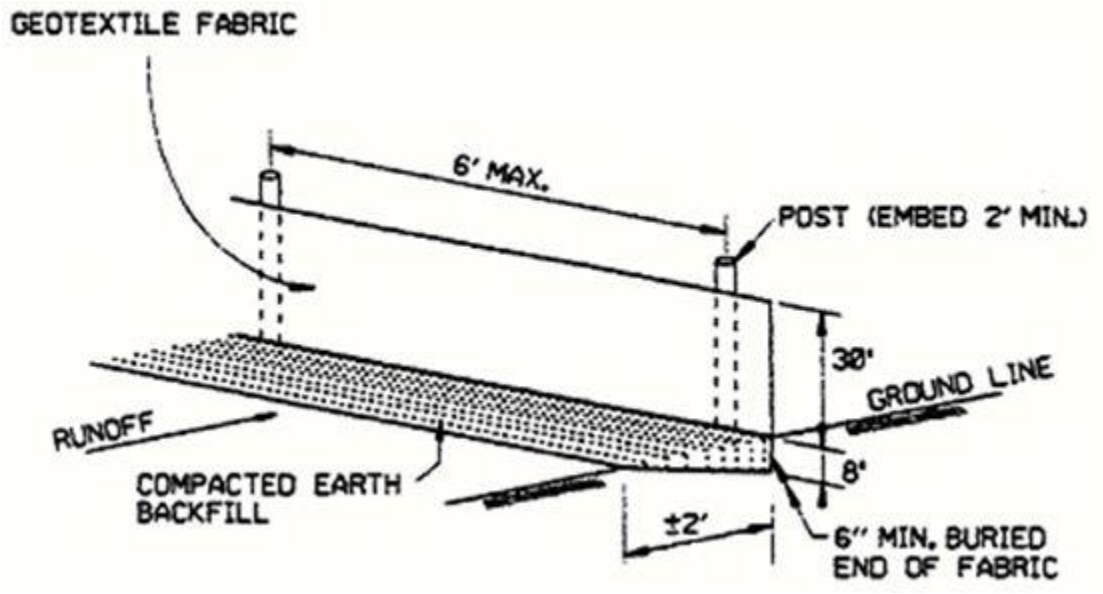

Figure 5. Embedded Silt Fence (Source: AHTD, 2001)

Limitations

Silt fence must be embedded or it will not function properly and should not be installed in rocky soil where it cannot be properly embedded.

Silt fence is not designed to hold back concentrated flow and therefore should not be placed across channels, gullies, or streams.

Silt fence should not be run down slopes as it will concentrate flow causing gully erosion and causing downstream BMPs to fail.

Silt fence should not be placed at the top of slopes as it will not provide any sediment control but will increase costs.

Maintenance Requirements

ESF should be inspected weekly and after ½ inch or greater rainfalls for proper installation, defective fencing, erosion on the ends, and excessive sediment buildup behind the fence (half the fence height).

INTEL PROTECTION

Description

Runoff from a construction site often carries sediment into the stormwater sewer system, which discharges into local streams. Besides the problems caused by sediment, other pollutants (e.g. oil, grease, and nutrients) are often attached to the sediment.

Inlet Protection is the practice of placing gravel, sand bags, or silt fence around an inlet to allow runoff to pond and sediment to settle out prior to entering the stormwater sewer system.

Applications

Any storm drain inlet that could receive runoff from the construction site.

Design Criteria

For inlets that are not in paved areas, a detention pond should be excavated around the inlet that is at least one foot deep (below the inlet crest) and that has a detention volume of at least 35 yd. per disturbed acre of watershed. The pond should start at the toe of the dam material; so, if gravel or sandbags are to be used the pond will be at least three feet from the inlet, whereas if silt fence is used, the pond can start at the edge of the inlet. The side slopes of the detention pond should be no greater than 2:1.

If silt fence is used as the dam material, the post should be driven at the edge of the inlet and should be no greater than three feet apart. The fence should be installed according to the detail in Figure 6.

For inlets in paved areas, either gravel or sandbags should be used as the dam material. If gravel is to be used as the dam material, the gravel should be at least 1" in diameter. The dam should be no higher than one foot high and the side should have no greater than a 2:1 (horizontal:vertical) slope. If sandbags are used as the dam material, the bags shall be no heavier than 50 lbs. and shall be stacked no higher than three bag diameters high, with the bags layered in a pyramid formation.

Limitations

Inlet protection control measures are not capable of handling large quantities of sediment and can require maintenance during rain events in order to protect nearby facilities and to eliminate flooding. Ponding can cause flooding problems for surrounding facilities.

Maintenance Requirements

Inlet protection measures should be inspected during storm events to ensure surrounding facilities are not flooded.

Inlet protection measures should be inspected bi-weekly and after ½ inch or greater rainfalls for proper installation, defective fencing, erosion, and excessive sediment buildup. Repair and replacement

of defective measures must be initiated within 24 hours of discovery and completed in no less than 7 days from discovery.

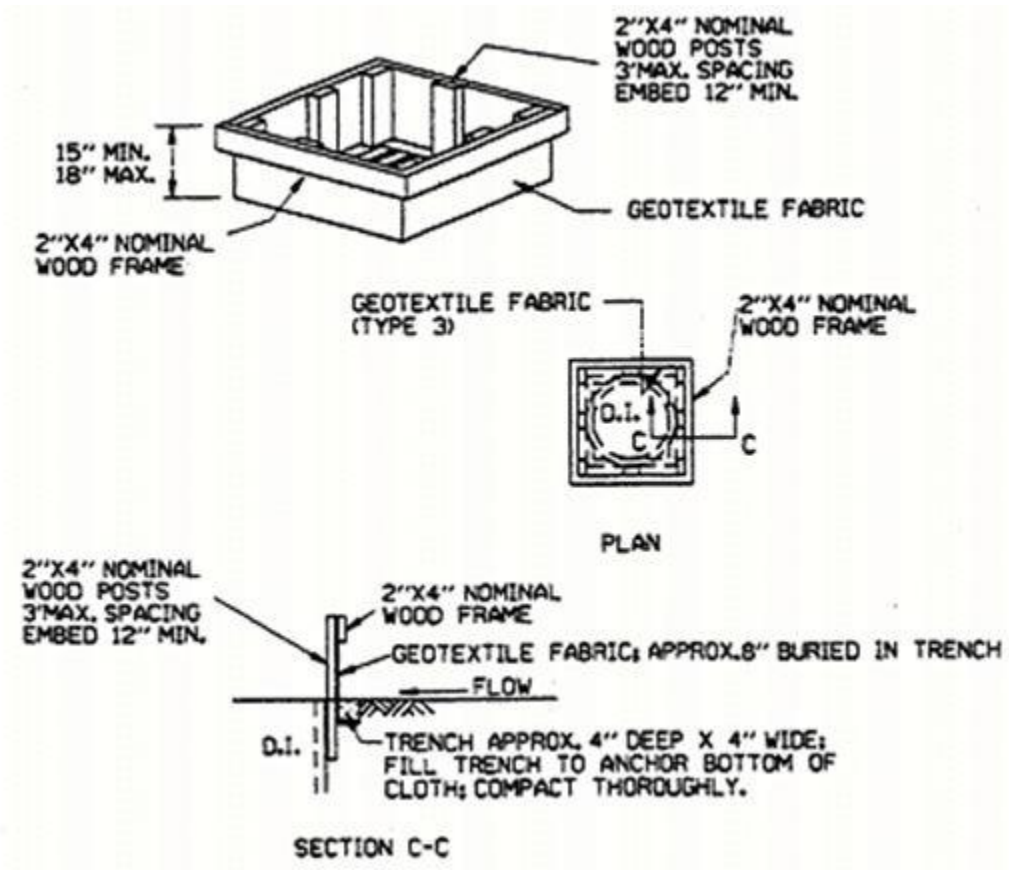

Figure 6. Silt fence inlet protection detail. (Source: AHTD, 2001)

SEDIMENT TRAPS

Description

Water carrying sediment off-site can cause damage to neighboring property and local streams.

Sediment Traps provide an area for sediment to settle out of the runoff prior to discharge from the site.

Applications

Sediment traps are well suited for sites that will be required to have a permanent stormwater control basin; but, should be used for any concentrated flow (culvert, pipe, swale, etc.) that could have sediment in the runoff leaving the site.

Design Criteria

The removal efficiency of sediment traps is a function of the total surface area of the pond, the shape of the pond, the influent flow rate, and the type of soil in the runoff. The maximum drainage area for a sediment trap shall be 3 acres, for larger areas a sediment basin shall be used.

Trap minimum bottom area and spillway width are given in Table 3. The berm or levee will curving upstream to hold the water, the berm will have 3:1 side slopes (maximum) and have a maximum depth of three feet. The outlet spillway shall be made of six inches of stone (6 inch diameter minimum) and be placed on a geotextile fabric.

Table 3. Minimum sediment trap dimensions

Drainage Area (acres)	Trap Water Bottom Area (sq ft)	Width Overflow Spillway (ft)
1 or less	250	6
1 to 2	675	12
2 to 3	1500	18

Limitations

Sediment traps do not have sufficient surface area to allow for settling of very small particles (e.g. clay, silt). Sediment traps are not appropriate for runoff from areas greater than three acres.

Maintenance Requirements

Sediment traps should be inspected bi-weekly and after ½ inch or greater rainfalls for proper installation, erosion, and excessive sediment buildup. Repair or replacement of defective measures must be initiated within 24 hours of discovery, and completed in no less than 7 days from discovery.

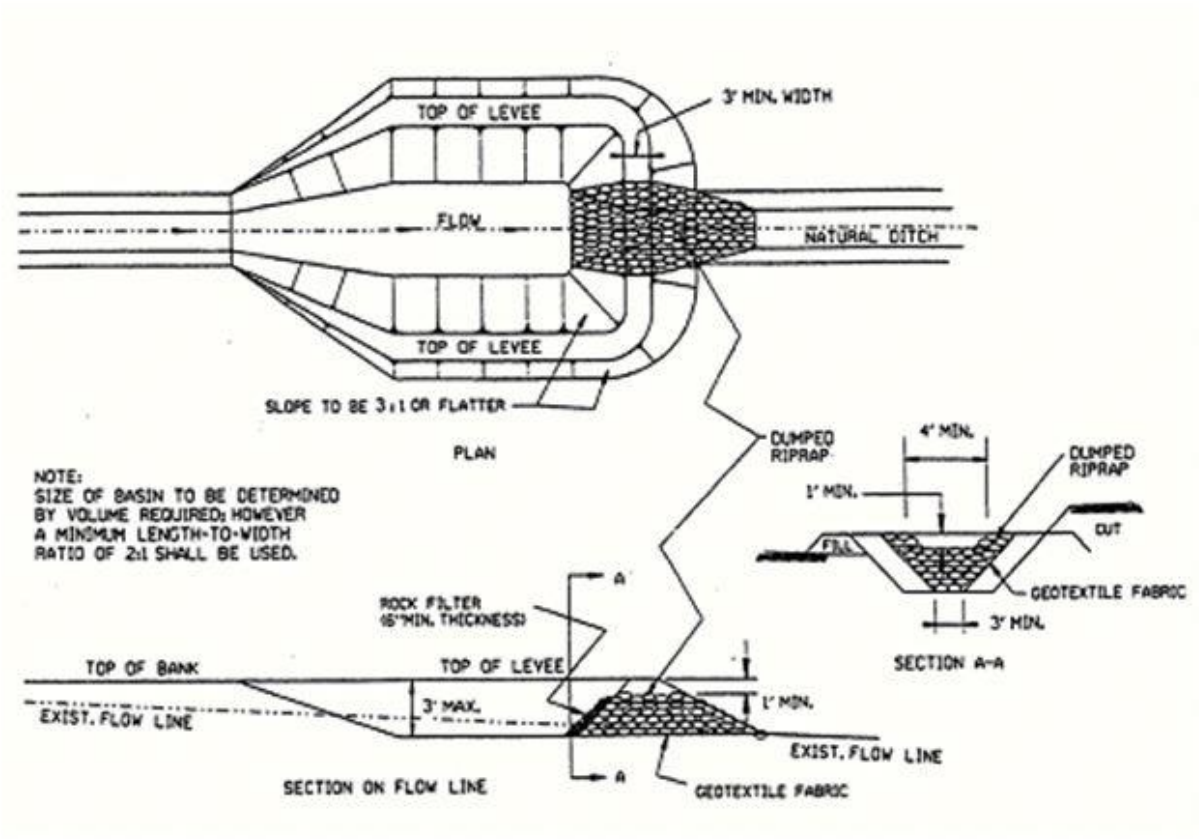

Figure 7. Sediment trap detail (Adapted from: AHTD, 2001)

CHECK DAMS

Description

Excessive velocity of water in swales or channels causes erosion and transports the sediment downstream to local streams.

Check Dams (ditch checks) slow water in channels and provide an area for sediment to settle out of the water before it flows over the dam.

Applications

Any unlined channel or any channel that the vegetative protection has not developed. Steeper slopes are more subject to erosion than flatter slopes.

Design Criteria

Place ditch checks such that the top of the downstream check is at the same elevation as the bottom of the next upstream check.

Checks must constructed such that the top elevation of the center of the check is at least six inches below the bottom elevation of both ends of the check. The dam must be excavated into the channel no less than six inches as shown in Figures 8, 9, and 10.

Limitations

If improperly constructed, water will flow around or through the check dam and erode the banks of the channel. Large flows (less frequent storms) can washout the check dams, erode the banks at the end of the check dams, or cause excessive scour at the outfall of the check dam.

Maintenance Requirements

Check dams should be inspected bi-weekly and after ½ inch or greater rainfalls for proper installation, erosion, and excessive sediment buildup. Repair or replacement of defective measures must be initiated within 24 hours of discovery, and completed in no less than 7 days from discovery.

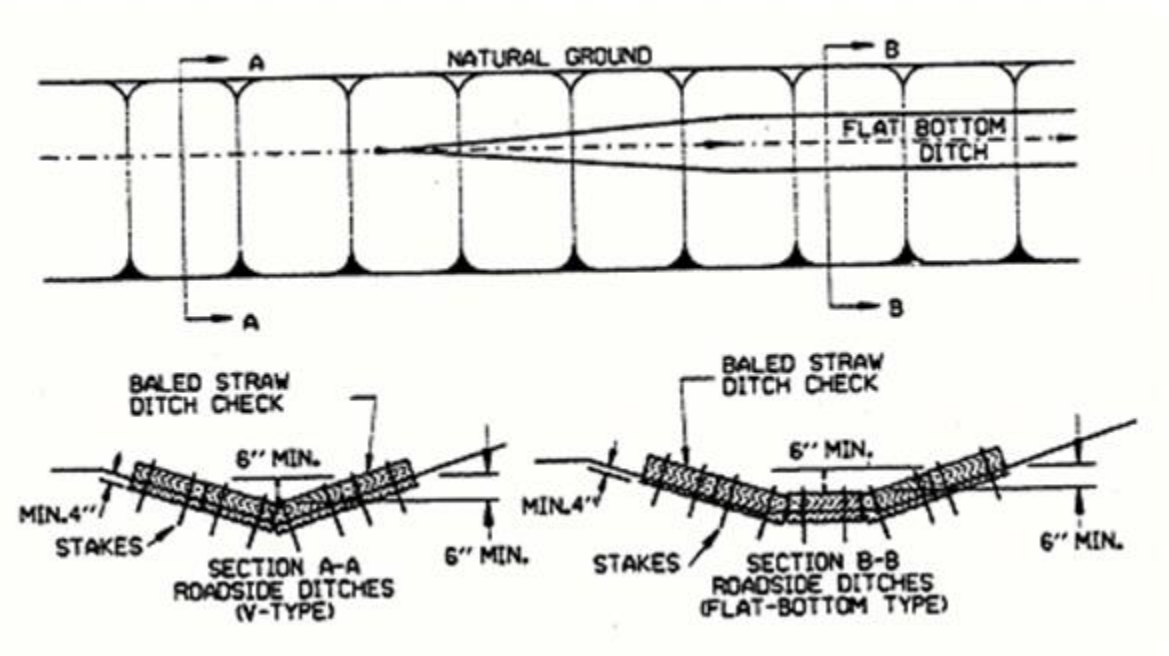

Figure 8. Baled straw check dam detail. (Source: AHTD, 2001)

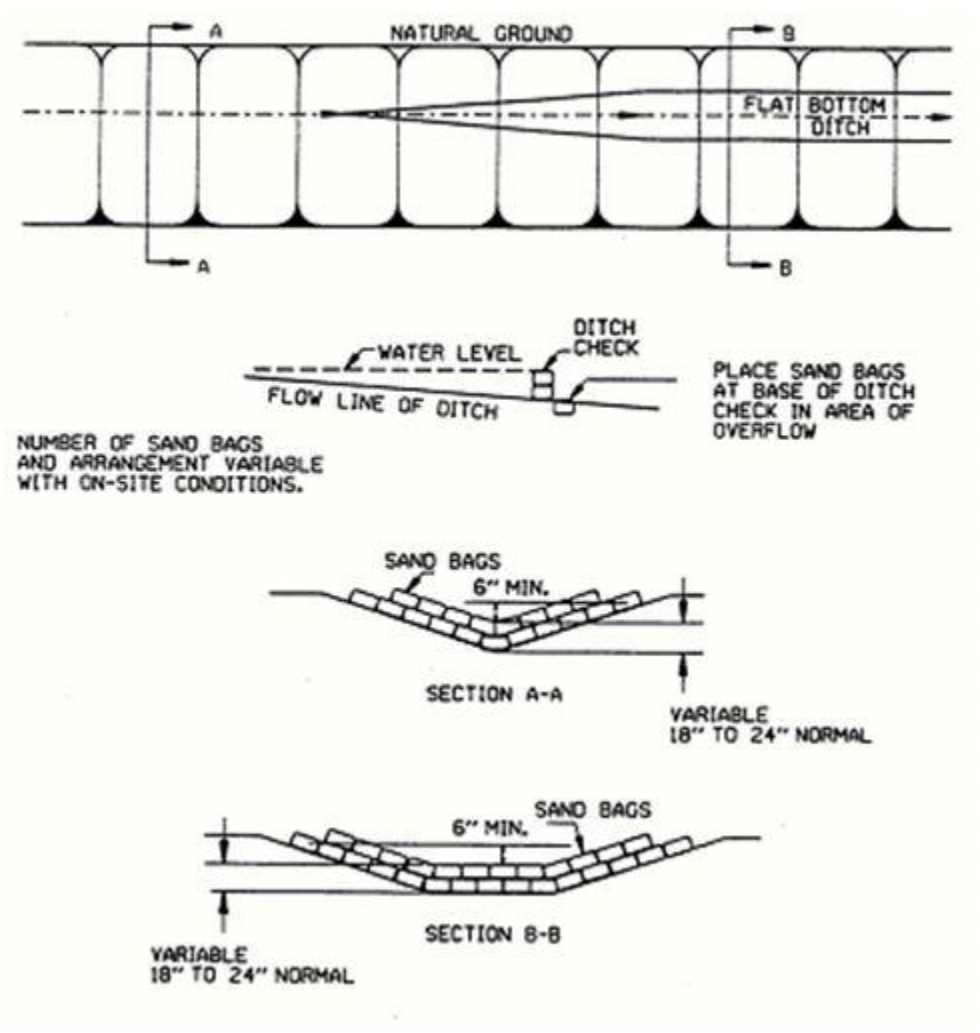

Figure 9. Sand bag check dam detail. (Source: AHTD, 2001)

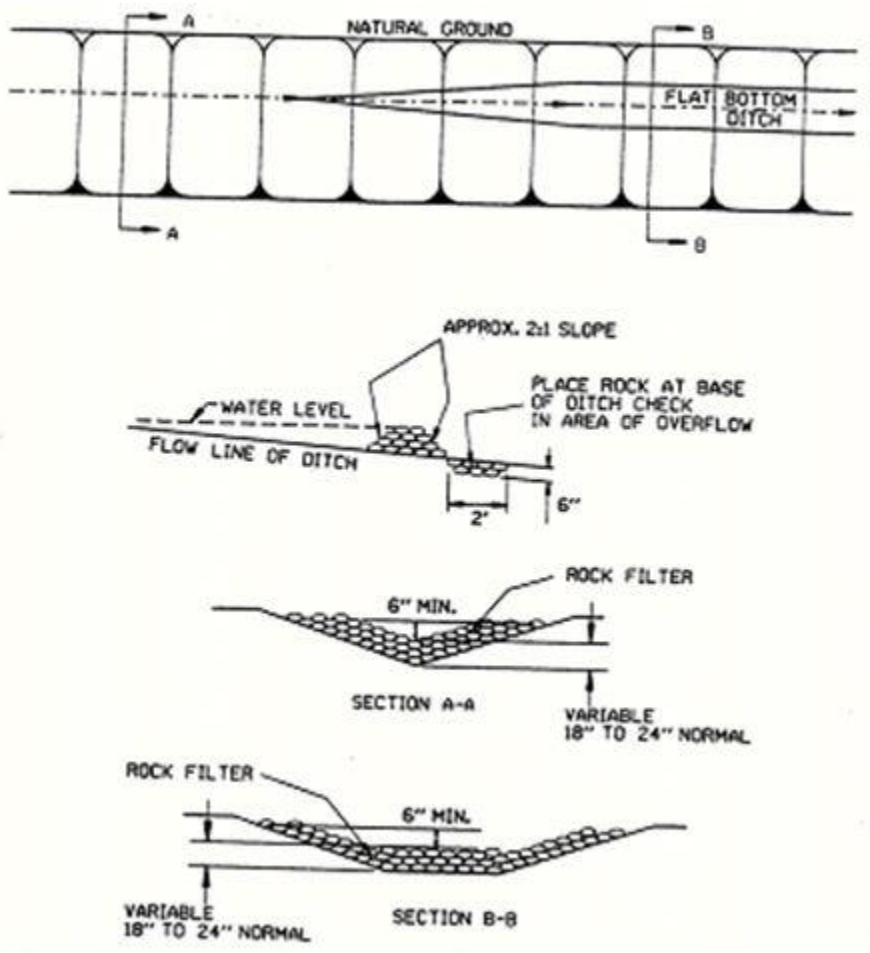

Figure 10. Rock check dam detail. (Source: AHTD, 2001)

SOLID WASTE MAMAGEMENT

Description
Solid wastes that are improperly disposed of, can be blown or washed from construction sites causing others to pick up the wastes from their property. Solid Waste Management refers to the proper handling and disposal of all construction wastes.

Applications
All construction sites.

Criteria
Trash and waste construction materials should be picked up daily and properly disposed of.

Limitations
None

Maintenance Requirements
Daily pickup of trash and construction waste materials.

HAZARDOUS WASTE MANAGEMENT

Description

Hazardous wastes can be washed or accidentally dumped into the storm water system causing serious pollution of local streams.

Hazardous Waste Management is the proper handling, storage, use, and disposal of material listed as hazardous by EPA and/or ADEQ

Applications

All materials listed as hazardous by EPA and/or ADEQ.

Criteria

Guidelines published by EPA and OSHA for the types of materials to be used on the construction site should be incorporated into the SWPPP.

The types of materials that are generally considered hazardous are:

- Fuels (diesel, gas, etc.)
- Oils and greases (lubricating, cutting, etc.)
- Petroleum based materials (asphalt, emulsions, solvents)
- Paints (including wood preservatives, stains, and lead based)
- Solvents (paint thinners, cleaners, etc.)
- Pesticides, herbicides, insecticides

Proper management of hazardous materials entails:

- Replace hazardous materials with non-hazardous materials
- Minimize the use of hazardous materials
- Reuse and recycle hazardous materials
- Proper use of hazardous materials
- Proper storage and handling of hazardous materials
- Proper disposal of hazardous materials.

Employees must be trained in the use, storage, and disposal of hazardous wastes. Hazardous materials should be stored so only authorized personnel can use the material.

The following methods should be followed for spill prevention and clean-up:

- The manufacturers recommended methods for spill clean-up should be clearly posted and personnel should be trained in the location of clean-up supplies and clean-up procedures.
- Clean-up supplies should be kept in a secure on site.
- Personnel should wear proper protective clothing when cleaning up the spill.
- Spills should be cleaned up immediately and the waste properly disposed of.
- Licensed hazardous waste haulers must be used to transport hazardous wastes to approved treatment and disposal sites.

CONCRETE WASTE MANAGEMENT

Description

Concrete waste from washout of ready mix trucks, concrete pumps, and other concrete equipment causes chemical and changes in runoff by increasing sediment and changing the pH.

Concrete Waste Management is the practice of capturing all concrete wastes.

Applications

All construction sites with concrete work.

Design Criteria

Provide a minimum of six cubic feet of containment volume for every 10 cubic yards of concrete to be poured.

Limitations

Improperly sized washout area can overflow and washout will not be contained.

Maintenance Requirements

The washout pit should be cleaned weekly and the waste material properly disposed of.

RESIDNETIAL AND COMMERICAL BMPs

Introduction

Historically, stormwater management policies were developed to mitigate the impact of land development in terms of the quantity of water released; therefore, systems were sized to reduce the post-development peak discharge rates to the pre-development rates. But, storm water systems sized to reduce peak discharge are not effective at removal of pollutants; therefore, the design of storm water systems must now incorporate methods for improving water quality. The table below gives an overview of the capabilities of the BMPs discussed in this manual.

Post development BMP characteristics chart

	Quantity		Quality				
Construction BMP	Flow atten-uation	Runoff volume reduction	Sediment control	Nutrient loading (N,P)	Organic loading	Metals loading	Bacteria loading
Dry Basin	●	○	●	○	⊙	○	⊙
Wet Basin	●	○	●	●	●	●	●
Grass Filter Strip	●	○	●	○	●	●	⊙
Inlet Floatables Interceptor	⊙	⊙	⊙	⊙	⊙	⊙	⊙
Oil-Sediment Separator	⊙	⊙	●	●	●	●	●
Infiltration Trench	●	●	●	●	●	●	●
Porous Pavement	●	●	○	○	○	○	⊙
Underground Detention Vault	●	○	●	○	⊙	○	⊙

● - Primary benefit ○ - Secondary benefit ⊙ - Little or no benefit

DRY BASIN

Description

Increased flowrates due to development cause increased erosion and increased stream bank erosion. In addition, runoff leaving as developed site it will carry sediment and attached pollutants.

A *Dry Basin* is a surface storage structure designed to provide water quantity control through decrease and attenuation runoff peaks and by providing an area for sedimentation to remove sediment and attached pollutants.

Application

Dry basins are applicable for large drainage areas and should be used in conjunction with a water quality control structure. In addition, the basin can be used for recreational and other open space opportunities between storm runoff events.

Design Criteria

The maximum contributing drainage area to be served by a dry basin is 75 acres. Dry basins should be sized to temporarily store the volume of runoff required to reduce the post-development peak flow of the 5-year, 10-year, 25-year, and 50-year storm events to the pre-development rates, and control the 100-year storm if required. The basin should be an elongated and irregular shape with a length to width ratio of 2:1; but, 3:1 is preferred. Routing calculations must be used to demonstrate that the storage volume is adequate. A detail of a dry basin is shown below.

Embankments shall be less than eight feet in height and shall have side slopes no steeper than 3:1 (horizontal to vertical). Geotechnical slope stability analysis is recommended for embankments greater than four feet in height.

The bottom area of storage facilities should be graded toward the outlet to prevent standing water conditions. A low flow or pilot channel across the facility bottom from the inlet to the outlet is recommended to convey low flows and prevent standing water conditions. Adequate maintenance access must be provided for all basins.

Inlet inflow channels are to be stabilized with flared riprap aprons, or the equivalent. A sediment forebay sized to 0.1 inches per impervious acre of contributing drainage should be provided.

Seepage control or anti-seep collars should be provided for all outlet pipes. Riprap, plunge pools or pads, or other energy dissipators are to be placed at the end of the outlet to prevent scouring and erosion. If the basin discharges to a channel with dry weather flow, care should be taken to minimize tree clearing along the downstream channel, and to reestablish a forested riparian zone in the shortest possible distance.

An emergency spillway is to be included in the stormwater pond design to safely pass the extreme flood flow. The spillway prevents pond water levels from overtopping the embankment and causing structural damage. The emergency spillway must be designed and located so that downstream structures will not be impacted by spillway discharges.

A minimum of 1 foot of freeboard must be provided, measured from the top of the water surface elevation for the extreme flood, to the lowest point of the dam embankment not counting the emergency spillway.

In the event that further reduced peak flowrates are required to protect the downstream channel, a dry extended detention basin can be utilized. Dry extended detention basins should be equipped with a low flow orifice capable of releasing the channel protection volume over 24 hours must. The channel protection orifice should have a minimum diameter of 3 inches and should be adequately protected from clogging by an acceptable external trash rack. A detail of a dry extended detention basin is shown below.

Limitations

Dry basins are only moderately effective at removing suspended pollutants (sediment and attached pollutants, nutrients and metals) and are ineffective at removing dissolved pollutants. During some periods of the year, dry ponds can be a breeding site for mosquitos.

Maintenance

Dry ponds require inspection and maintenance as shown below:

- Bi-weekly or as needed, mow and tend to grass around pond.
- Monthly or more frequently if required, remove trash and debris from pond, outlet structure, and surrounding area.
- Annually, inspect embankments, outlets, and spillways for damage and maintain as required.
- Annually, inspect for sediment buildup and remove buildup as required.
- Annually, remove any invasive vegetation.

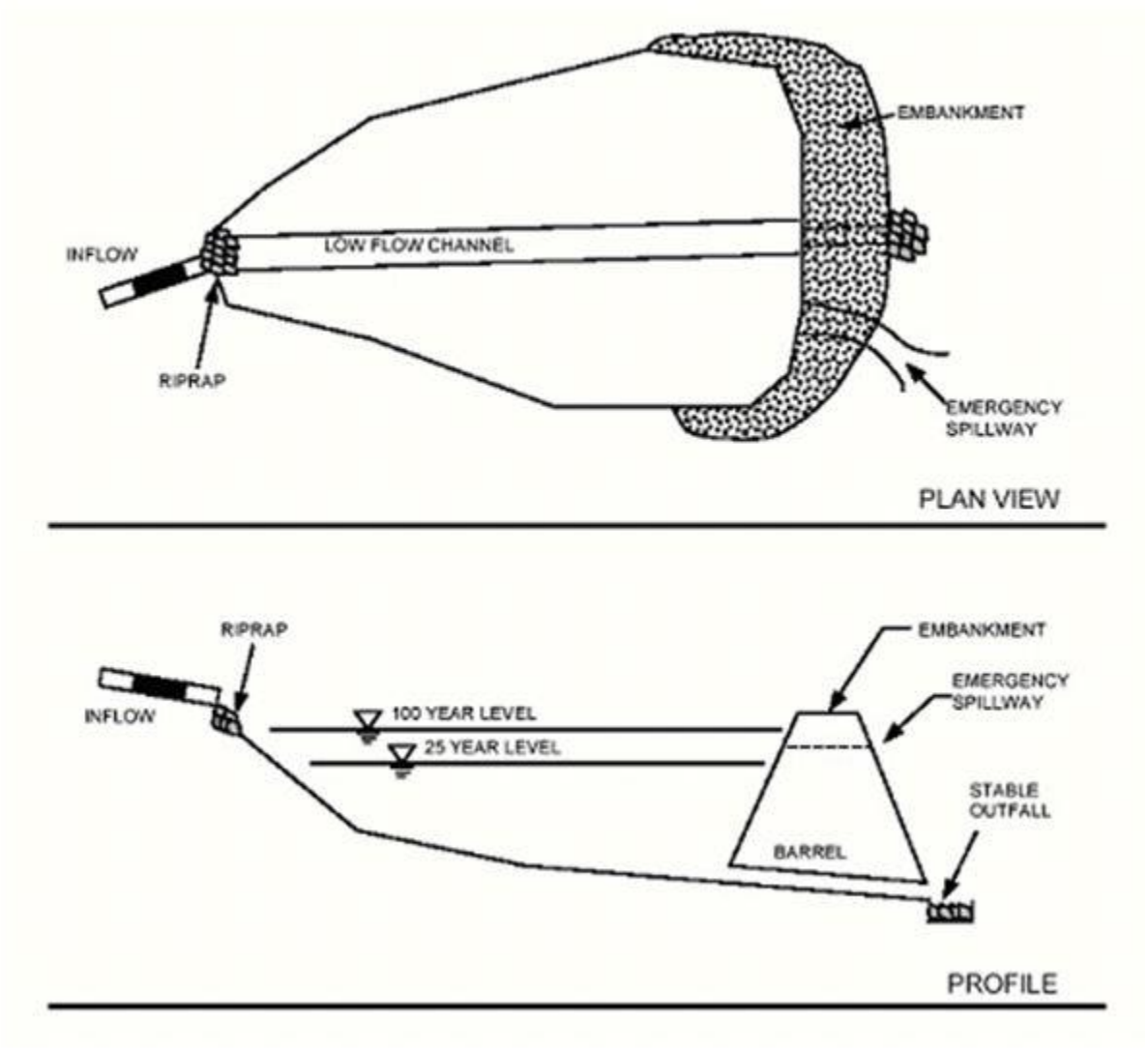

Figure 11. Dry detention basin detail. (Source: GSWMM, 2001)

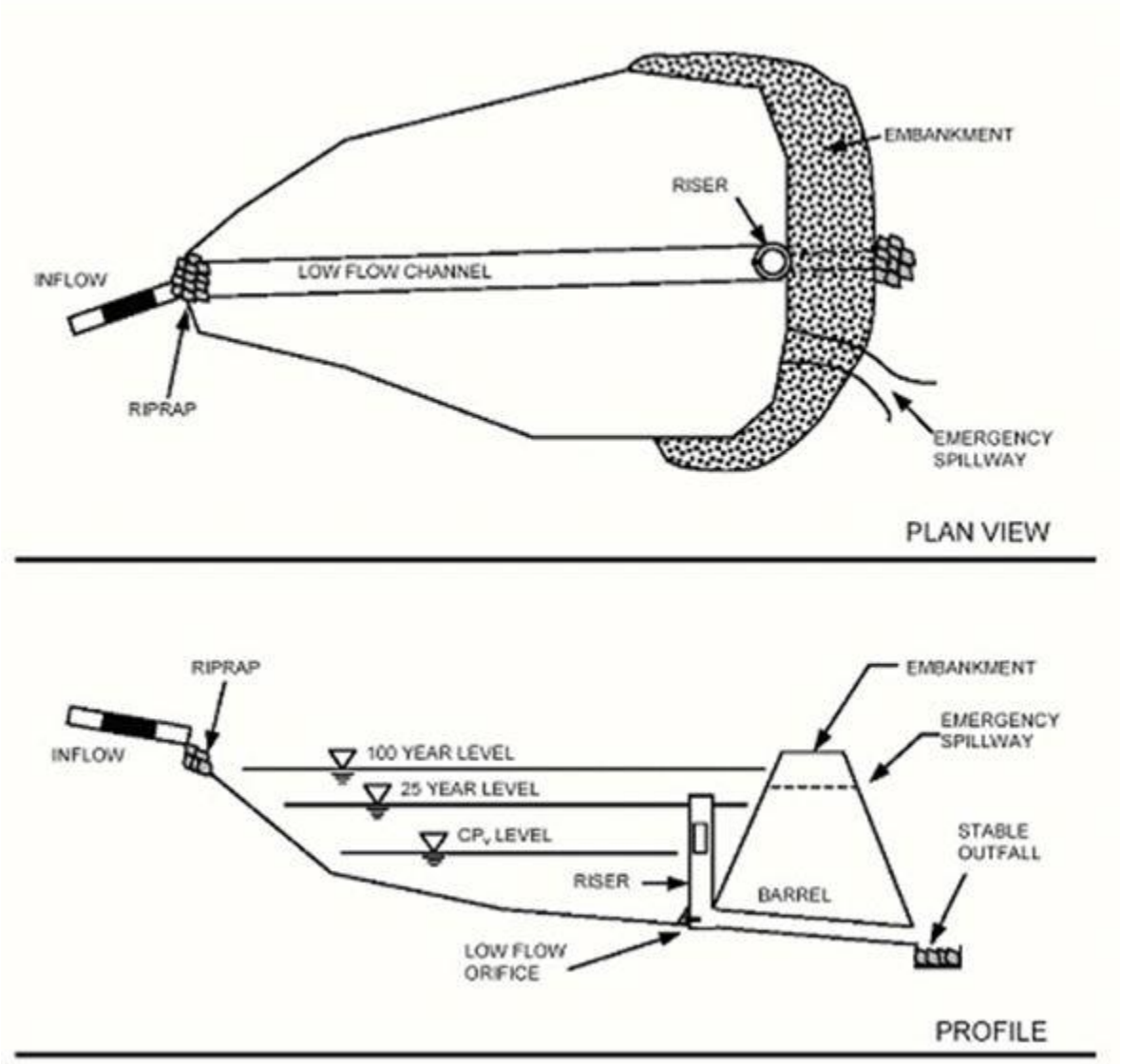

Figure 12. Extended dry detention basin detail. (Source: GSWMM, 2001)

WET BASIN

Description

Increased flow rates due to development cause increased erosion and increased stream bank erosion. In addition, runoff leaving as developed site it will carry sediment and attached pollutants.

Wet Ponds (retention ponds, wet extended detention ponds) are constructed to provide a permanent pool of water during the wet season or year-round. The pond provides for peak discharge attenuation and pollutant removal. Pollutants are removed from stormwater by settling and biological uptake.

Applicability

Wet ponds can be designed to enhance the landscaping and provide an attractive addition to a development. To maintain a permanent pool, wet ponds typically require about a minimum drainage area of 25 acres. Maintenance needs, dissolved oxygen requirements, and safety concerns should be addressed during design.

Design Criteria

The maximum contributing drainage area to be served by a wet basin is 75 acres and the minimum is 25 acres. The active pool of the wet basins should be sized to temporarily store the volume of runoff required to reduce the post-development peak flow of the 5-year, 10-year, 25-year, and 50-year storm events to the pre-development rates, and control the 100-year storm if required. The basin should an elongated and irregular shape with a length to width ratio of 2:1; but, 3:1 is preferred. Routing calculations must be used to demonstrate that the storage volume is adequate. A detail of a wet basin is shown in Figure 13 and a typical cross section of a wet basin is shown in Figure 14. The designer must conduct a water balance to ensure that sufficient inflow is available to maintain the permanent pool. The permanent pool should be at least four feet deep is discourage growth of aquatic plants.

Embankments shall be less than eight feet in height and shall have side slopes no steeper than 3:1 (horizontal to vertical). Geotechnical slope stability analysis is recommended for embankments greater than four feet in height. Adequate maintenance access must be provided for all basins.

Inlet inflow channels are to be stabilized with flared riprap aprons, or the equivalent. A sediment forebay sized to 0.1 inches per impervious acre of contributing drainage should be provided.

Seepage control or anti-seep collars should be provided for all outlet pipes. Riprap, plunge pools or pads, or other energy dissipators are to be placed at the end of the outlet to prevent

scouring and erosion. If the basin discharges to a channel with dry weather flow, care should be taken to minimize tree clearing along the downstream channel, and to reestablish a forested riparian zone in the shortest possible distance.

An emergency spillway is to be included in the stormwater pond design to safely pass the extreme flood flow. The spillway prevents pond water levels from overtopping the embankment and causing structural damage. The emergency spillway must be designed and located so that downstream structures will not be impacted by spillway discharges.

A minimum of 1 foot of freeboard must be provided, measured from the top of the water surface elevation for the extreme flood, to the lowest point of the dam embankment not counting the emergency spillway.

Limitations

Depending on the location, wet ponds can require maintenance to remove trash and overgrowth. In developments with excess nutrients (nitrogen and phosphorus in particular) due to over fertilization, wet ponds can require mechanisms (fountains, bubblers) to input oxygen. In some developments a permanent pool of water can be viewed as a safety concern.

Inspection and Maintenance

Wet Ponds should be inspected and maintained according to the following schedule:

- Bi-weekly or as needed, mow and tend to grass around pond.
- Monthly or more frequently if required, remove trash and debris from pond, outlet
- structure, and surrounding area.
- Annually, inspect embankments, outlets, and spillways for damage and maintain as
- required.
- Annually, inspect for sediment buildup in forebay and wet pool, remove buildup if
- required.
- Annually, harvest wetland vegetation (if used) and remove any invasive vegetation.

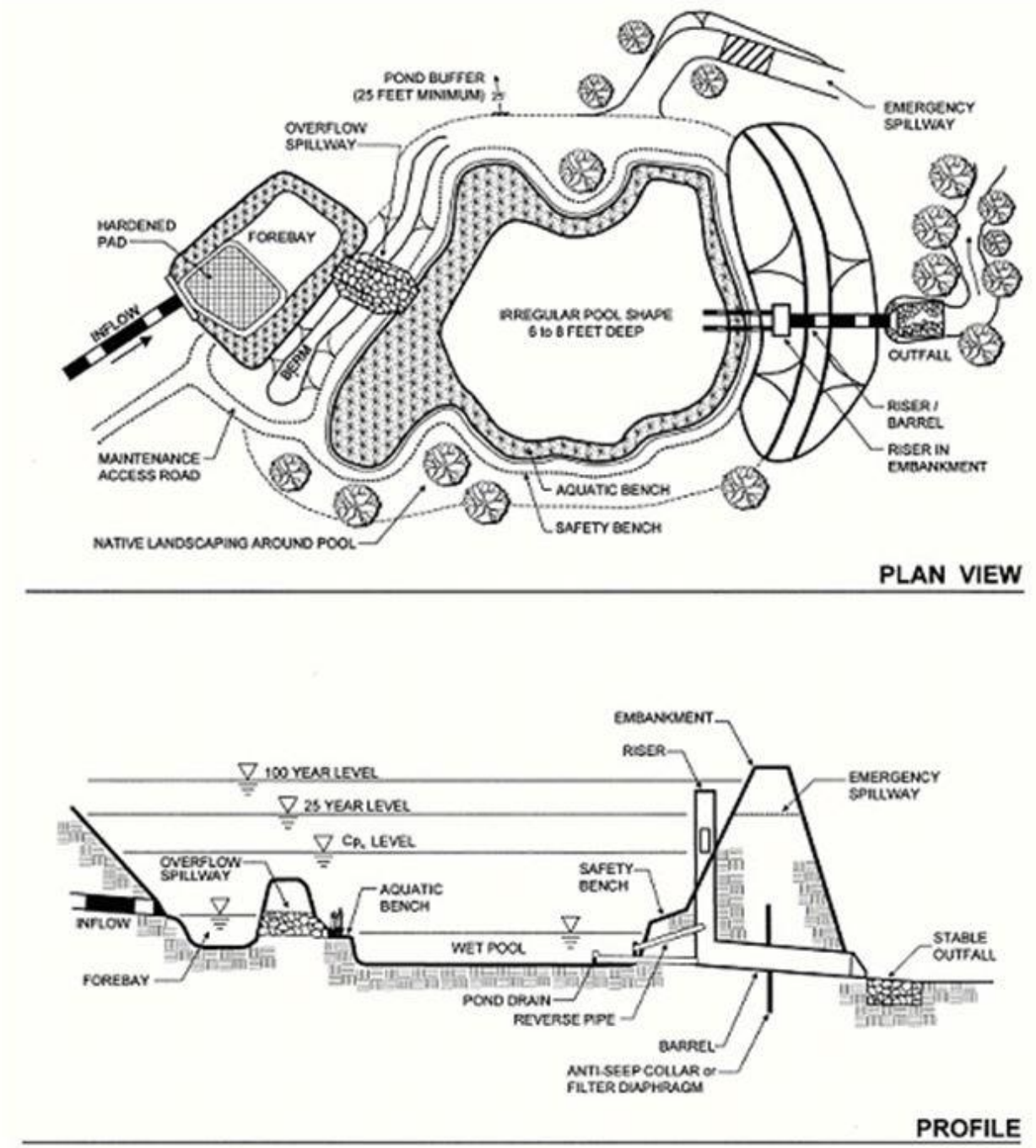

Figure 13. Wet pond detail. (Source: Center of Watershed Protection)

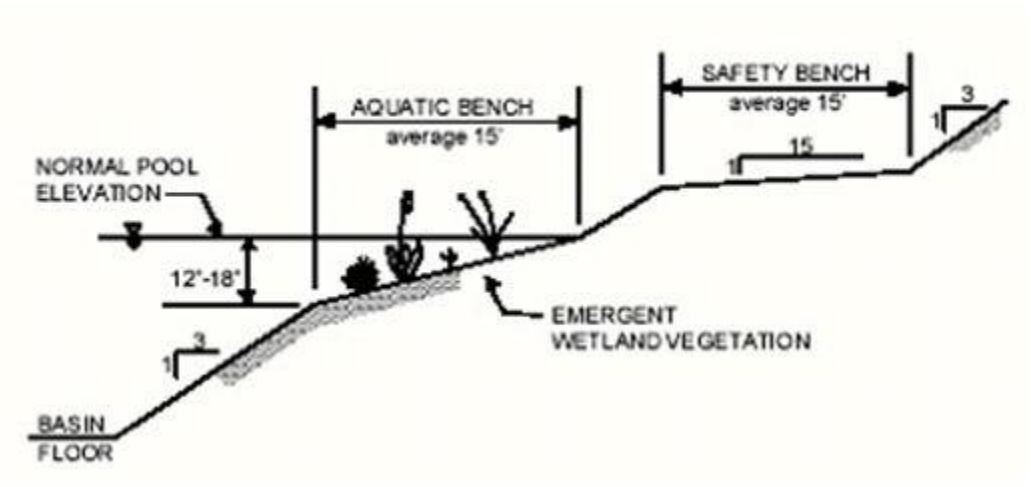

Figure 14. Cross section of a wet basin.

VEGETATED SWALES AND STRIPS

Description

Vegetated Swales and Strips (grass lined swales, biofilters, grassed channels) combine a channel, storage, and vegetation. The channel is used to move stormwater from one place to another; but, the channel is designed to provide some stormwater storage. The swale is designed to allow ponding (backwater) in the channel to enhance infiltration and pollutant removal. The vegetation provides increased pollutant (sediment, nutrients, metals) removal.

Selection Criteria

Swales are best suited for sites with long narrow areas available for stormwater handling and storage. Swales are also well suited for areas that generate highly contaminated runoff such as filling stations.

Generally swales are appropriate for drainage areas of five acres or less and should be constructed on flat slopes (1 to 2 percent). The bottom of the swale should be two feet above the seasonally high water table.

Design and Sizing

Swales function best if the stormwater moves through the channel slowly and they are designed to maximize the channel surface area wetted by the flow.

A swale should be designed such that a 1 inch storm will take 10 minutes to travel down the swale and should be designed as shown in the detail below.

Swales should be designed as trapezoidal or parabolic channels with longitudinal slopes of 1 to 2 percent and side slopes no greater than 4:1 (25 percent). The channel bottom should be 2 to 8 feet wide.

The swale should have dense vegetative cover that should be able to withstand the velocities induced by larger storms (25-year storm).

Limitations

Pollutant removal capabilities are substantially decreased for swales in highly impermeable soils, for swales constructed on steep slopes, and for swales handling runoff from too large of drainage areas.

Inspection and Maintenance

Swales should be inspected and maintained as indicated below.

- Bi-weekly or as needed, keep grass at a height of 3 to 4 inches.
- Monthly or more frequently if required, remove trash and debris, outlet structure, and
- surrounding area.
- Annually, inspect embankments and outlets for damage and maintain as required.
- Annually, inspect for sediment buildup and remove buildup when required.

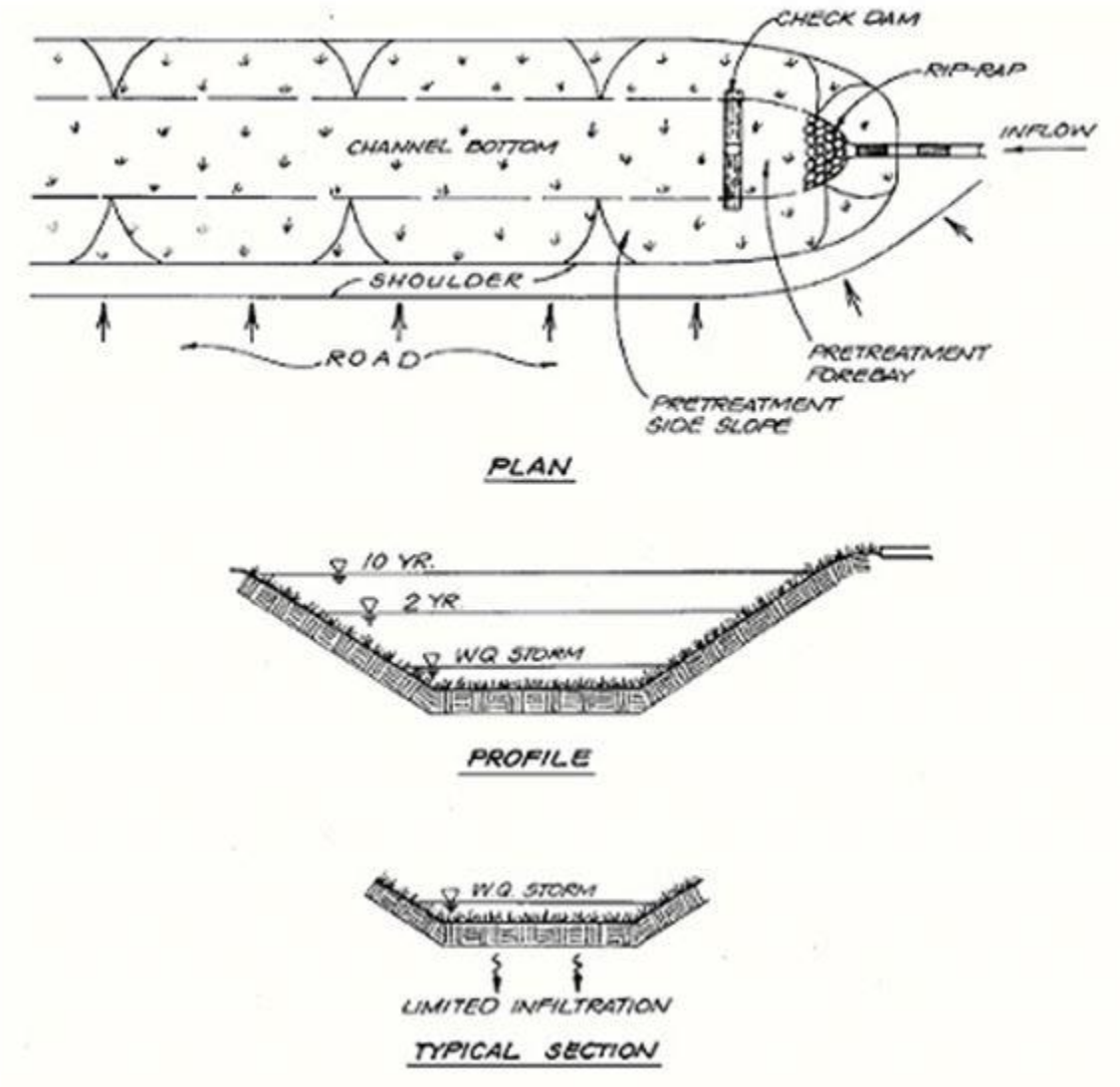

Figure 15. Grass swale detail. (Source: GSWMM, 2001)

GRASS FILTER STRIP

Description
Runoff flowing in sheet flow and carrying sediment and associated pollutants will end up in the local streams causing the steams to be polluted.

Grass Filter Strips remove sediment from runoff in sheet flow.

Application
Areas adjacent to low or medium density residential or commercial areas on gentle slopes (less than 15%) with a width of strip running along the contour.

Design Criteria
Grass filter strips should be placed adjacent to low or medium density residential or commercial areas with a width equal to the width of the runoff area. The filter strip should have a dense mat of vegetation to bind the soil and should have a moderate slope (5% or less). The length of the strip should meet the minimum standards shown in Table 4. Filter strips should be layout according to the detail in Figure 16. A stone drop made from pea gravel should be built at the head of the filter to pre-treat the runoff and to act as a level spreader. The stone drop should be at least one foot wide and one foot deep.

Table 4. Minimum length of filter strips (Source: MAACD, 1995)

Slope of strip (%)	Length of Grassed Filter Strip (ft)	Length of Forested Filter Strip (ft)
0	10	25
2	12	29
4	14	33
6	16	37
8	18	41
10	20	45
15	25	55

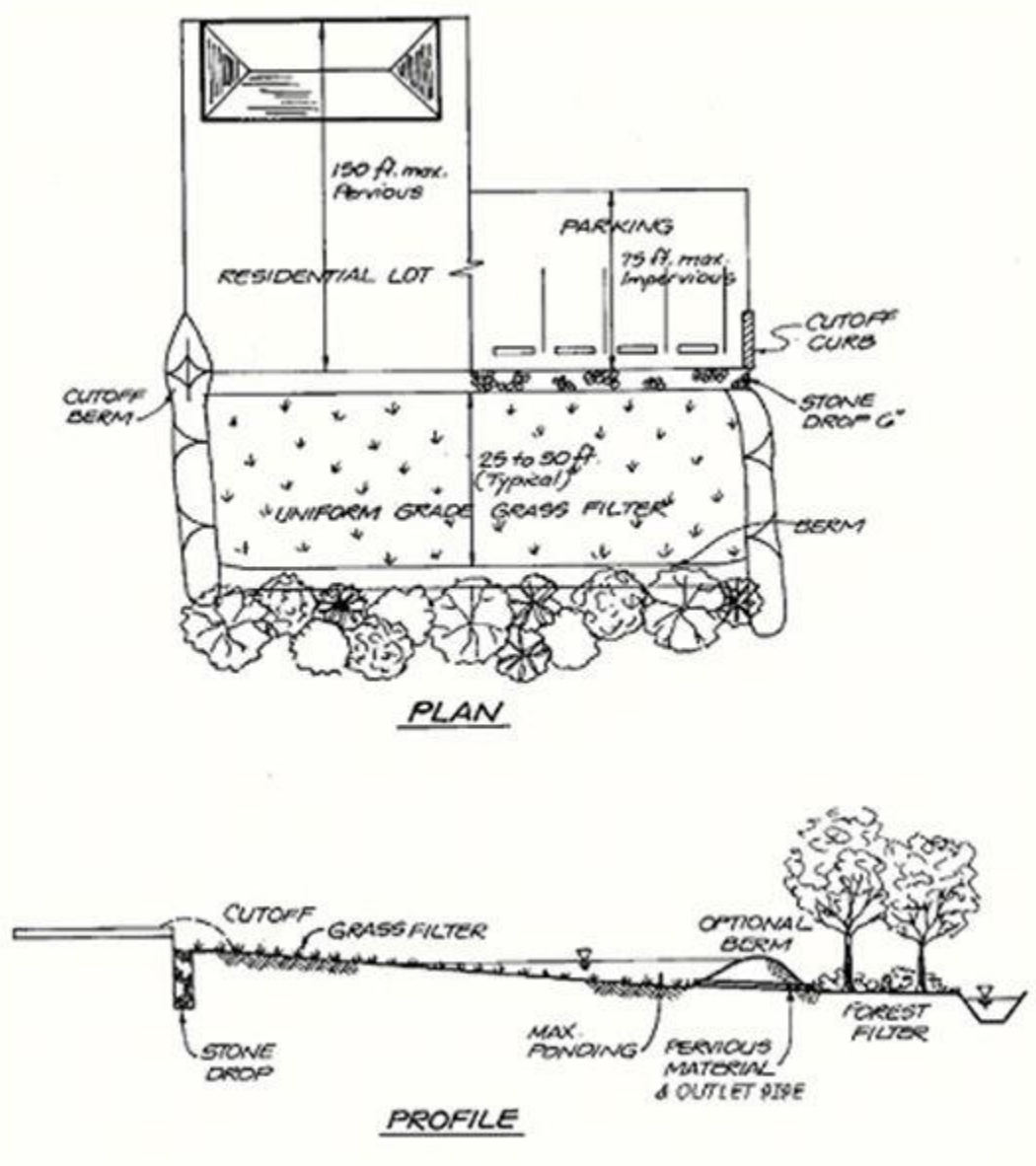

Figure 16. Filter strip detail. (Source: GSWMM, 2001)

Limitations

If not planned properly, the land requirements of filter strips can be a problem in some developments.

If the filter strip does not have a uniform grade, runoff will concentrate and could cause erosion in the filter strip.

Inspection and Maintenance

Filter strips should be inspected periodically to ensure that the filter strip is working properly and that no erosion is taking place. The strip should be mowed to height of 4 to 6 inches as required.

INLET FLOATABLE INTERCEPTORS

Description

Trash, debris, and lawn wastes are picked up by storm water and carried to local streams causing unsightly conditions and pollution of the stream.

Inlet Floatable Interceptors are placed in curb or drop inlets to screen the floatables out of the runoff.

Applicability

Curb inlets and drop inlets that are subject to excess trash and debris.

Design and Sizing

Inlet floatable interceptors are manufactured BMPs that fit into curb inlets or drop inlets. The inserts should be purchased, installed, and maintained according to the manufacturer's recommendations.

Limitations

Inlet floatable interceptors are very high maintenance BMPs. Debris that is collected from one storm can dry between storms and be re-suspended during the next storm. Increased public education on proper disposal of trash might provide better results.

Inspection and Maintenance

Inlet floatable interceptors should be inspected at least weekly and after every ½" or greater rain and any accumulated debris removed.

OIL-SEDIMENT SEPARATORS

Description
Runoff from filling stations, vehicle service areas, and truck parking lots typically have large concentrations of hydrocarbons (oil, grease, fuel) and other vehicle fluids.

Oil-Sediment Separators are used in these hot spots to remove the hydrocarbons from the storm water prior to discharge to the storm water system.

Applicability
Any high use area that has the potential for large amounts of sediment and/or hydrocarbons in the runoff.

Design and Sizing
Individual oil-sediment separators are appropriate for drainage areas of one acre or less and should be sized to provide a detention volume of 400 cubic feet/acre of drainage area. The detention volume is the volume of water behind the last overflow weir as shown in the detail below. The minimum depth of water in the detention volume should be three feet. Sediment will be removed in the first chamber and oil and floating debris will be trapped in the first and second chambers; therefore, adequate volume must be provided for storage of these pollutants based upon the runoff source and the prescribed maintenance schedule.

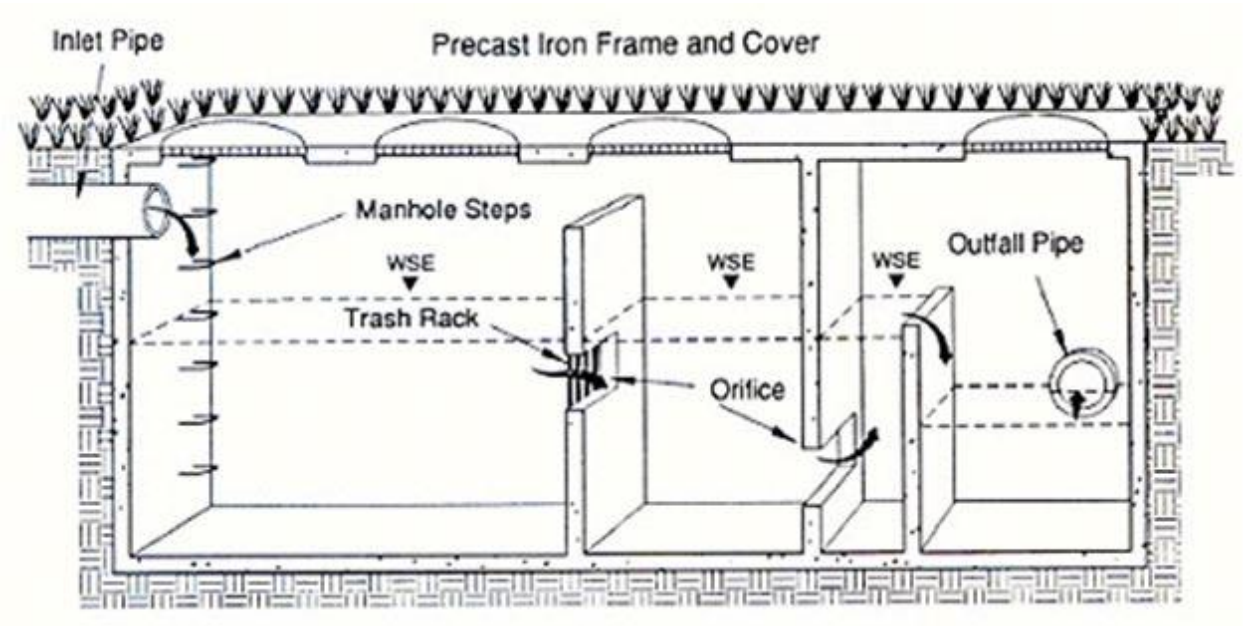

Figure 17. Oil-sediment separator vault detail. (Source GSVMM, 2001)

Limitations
If oil and sediment are not removed regularly, oil-sediment separators will not function Properly

Inspection and Maintenance
The separator should be inspected monthly for buildup of sediment, oil, and floatables and removed as required.

INFILTRATION TRENCH

Description
Pollutants and sediment in runoff from developed areas cause pollution in local streams.

Infiltration Trenches are structural BMPs that take the first flush of rainfall and provide for decreased peak runoff flowrates and removal of pollutants from

Applicability
Infiltration trenches are appropriate BMPs for residential and light commercial areas. The runoff should not have large amounts of sediment.

Design Criteria
Infiltration trenches can be used for drainage areas of five acres or less and should only be constructed in areas with soils that have an infiltration rate of 0.5 inches per hour or greater. Infiltration trenches should be only be placed in areas that the bottom of the trench will be a minimum of three feet above the season high water table. The trench should be designed such that the voids in the trench will hold ½ inch of rainfall from the drainage area. The trench should only be filled with uniform aggregate of 2 inch or 3 inch diameter. The trench should have a grass filter strip on the upstream side to remove sediment and prolong the useful life of the trench. An observation well must be provided to allow inspection of the trench and determine if the trench is draining properly. The detail below is a typical layout of an infiltration trench.

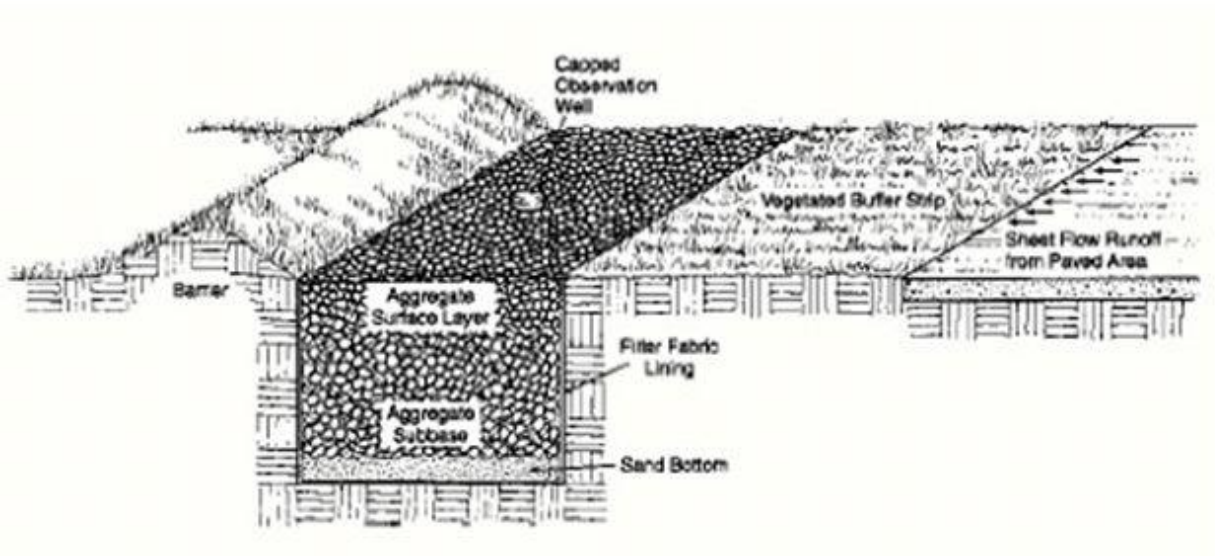

Figure 18. Infiltration trench detail. (Source: GSWMM, 2001)

Limitations

Runoff with excessive sediment will plug the pore space in the trench and decrease the useful life of the trench; therefore, infiltration trenches should only be used for runoff that will not care large amounts of sediment.

Inspection and Maintenance

The trench and drainage area should be inspected monthly and after any rainfall event to ensure that both are fee of debris and sediment build up. The observation well should be checked four times a year to determine if the captured water is draining within three days after the rainfall stops. If the trench is not working properly, the rock media and filter fabric must be removed, the trench walls must be scarified to expose new soil, and the filter fabric and trench rock media replaced.

POROUS PAVEMENT

Description

Runoff from paved areas often pollutants from vehicles (e.g. oil, brake fluid, antifreeze) that are carried to the local streams. Excessive runoff from parking lots causes erosion and stream bank erosion.

Porous pavement is a stormwater management practice that allows runoff to infiltrate into and through the pavement, which decreases the amount of the runoff from the pavement and for treatment of the pollutants.

Applicability

Porous pavement is best suited for low traffic or overflow parking lots on soils with adequate infiltration capacity.

Design Criteria

Porous pavement should only be used in low traffic or overflow parking lots that will not receive large amounts of sediment from vehicles. The pavement structure should be constructed according to the detail in Figure 19 and must be placed on soils with a minimum infiltration capacity of one inch per hour. The stone reservoir should have a capacity of holding one inch of rainfall in the voids of the stones. The pavement should be placed at least three feet above the seasonal high water table.

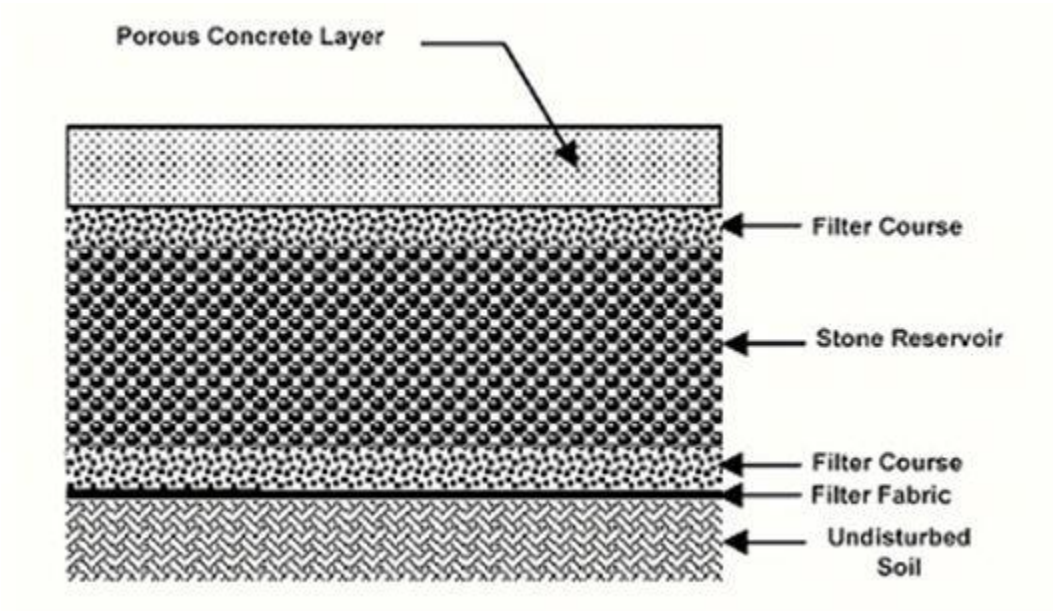

Figure 19. Porous pavement detail. (Source: GSWMM, 2001)

Limitations

Failure of porous pavement is typically do to excessive sediment build up on the pavement surface from either too much sediment being tracked onto the pavement or from inadequate cleaning of the pavement.

Porous pavement should not be used in areas that require sanding during icy conditions.

Inspection and Maintenance

The pavement should be inspected and vacuum swept monthly or more frequently as required to keep the pavement clean. Sediment buildup should be removed after ever storm. The pavement should not be resurfaced with non-porous pavement.

UNDERGOUND DETENTION VAULT

Description
In high density development areas, dry basins and wet basins may take too much land space that is needed for development.

Underground Detention Vaults provide are a structural BMP that provides for peak flow attenuation and reduction without taking up valuable surface area.

Application
Ultra-urban or high density developments where land space is not available for surface detention basins.

Design Criteria
Underground detention systems are sized to temporarily store the volume of runoff required to reduce the post-development peak flow of the 25-year storm event to the pre-development rate. Due to the storage volume required, underground detention vaults and tanks are typically not used to control the 100-year storm except for very small drainage areas (<1 acre). Routing calculations must be used to demonstrate that the storage volume is adequate.

Underground detention tanks and vaults must meet structural requirements for overburden support and traffic loading if appropriate. The minimum pipe diameter for underground detention tanks is 36 inches. Underground detention vaults must be constructed with a minimum of 3,000 psi structural reinforced concrete and all construction joints must be provided with water stops. Cast-in-place wall sections must be designed as retaining walls. The maximum depth from finished grade to the vault invert should be 20 feet. Underground vaults should be designed according to the detail shown below.

Adequate maintenance access must be provided for all underground detention systems. Access must be provided over the inlet pipe and outflow structure. Access openings can consist of a standard frame, grate and solid cover, or a removable panel. Vaults with widths of 10 feet or less should have removable lids.

A separate sediment sump or vault chamber sized to 0.1 inches per impervious acre of contributing drainage should be provided at the inlet for underground detention systems.

Outlet orifices or weirs should be designed to match the pre-development flowrates of the frequencies of storms as required by local regulations.

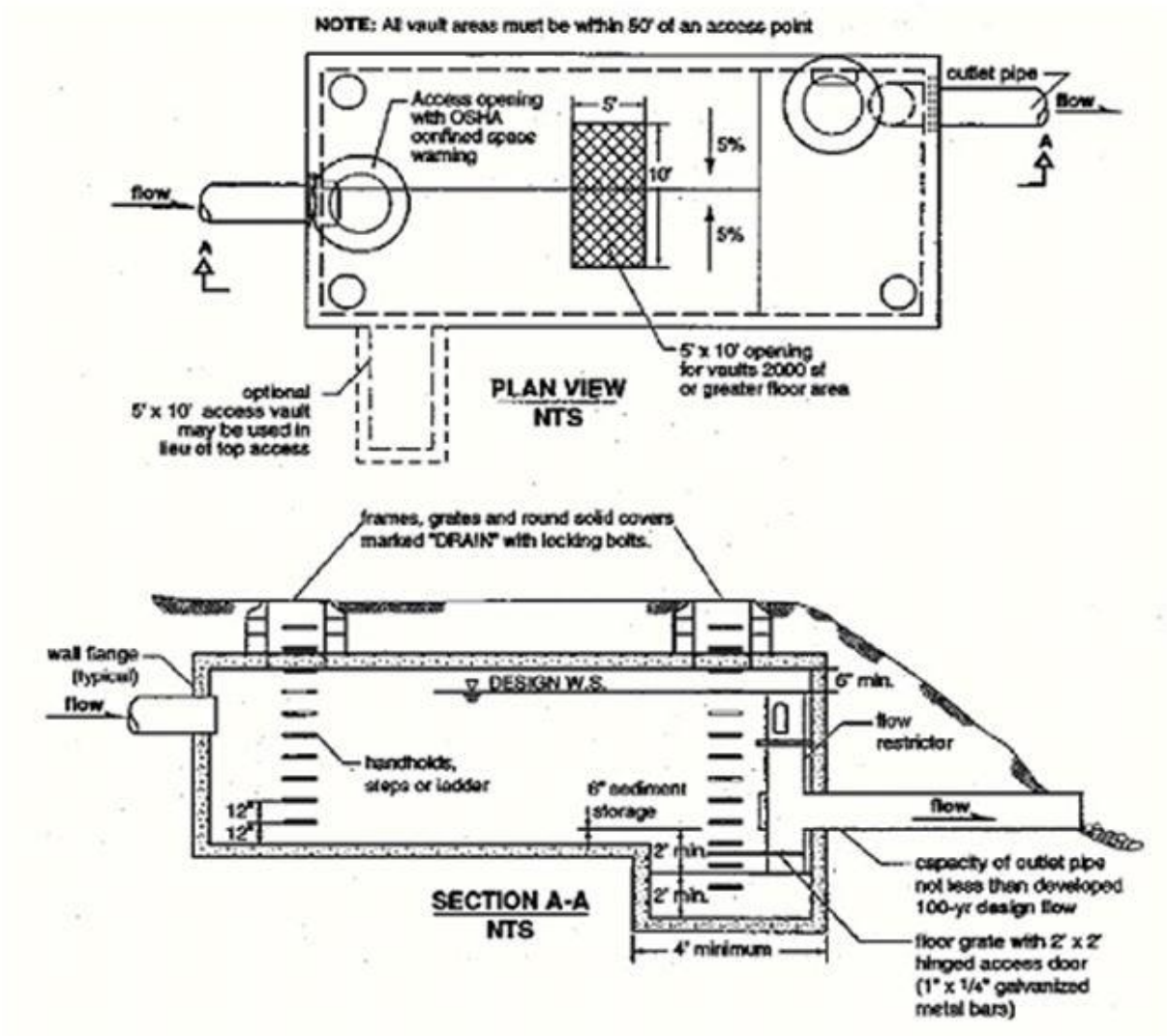

Figure 20. Underground detention vault detail. (Source: WDE, 2000)

Limitations

Underground detention vaults are not typically designed to remove pollutants. Extra construction costs and maintenance costs make utilization of underground detention vaults prohibitively expensive except where land costs make them affordable. Runoff should go through a pollutant removal BMP prior to the underground vault.

Inspection and Maintenance

The inlet to the vault should be inspected and trash or sediment removed. Quarterly the vault or tank should be inspected for buildup of sediment and trash, which should be removed as required.

SEDIMENT CONTROL BMPs

Embedded Silt Fence

Description
Water flowing in sheet or shallow flow will carry sediment down a slope and off-site.

Embedded Silt Fence (ESF) is a barrier made of geotextile fabric placed along a contour to capture water, slow the flowrate, trap sediment, and allow water to filter through the fabric.

Applications
Small drainage areas with sheet flow or shallow flow.

Design Criteria
Embedded silt fences should be placed on a contour and designed to hold runoff from the 10-year storm from an area of 100 sq. ft. for each foot of fence. The maximum depth of retained water on the upstream side of the fence should be two feet. The maximum slope length above the fence should be no more than 100 feet. The maximum slope above the fence is 1:1.

The fabric shall be buried in a trench that is at least eight inch deep and eight inches wide as shown below. The fabric shall be place on the upstream side of the posts.

Post shall be made of metal (T-post) or wood (2"x2") and placed no more than six feet apart.

Figure 21. Embedded silt fence

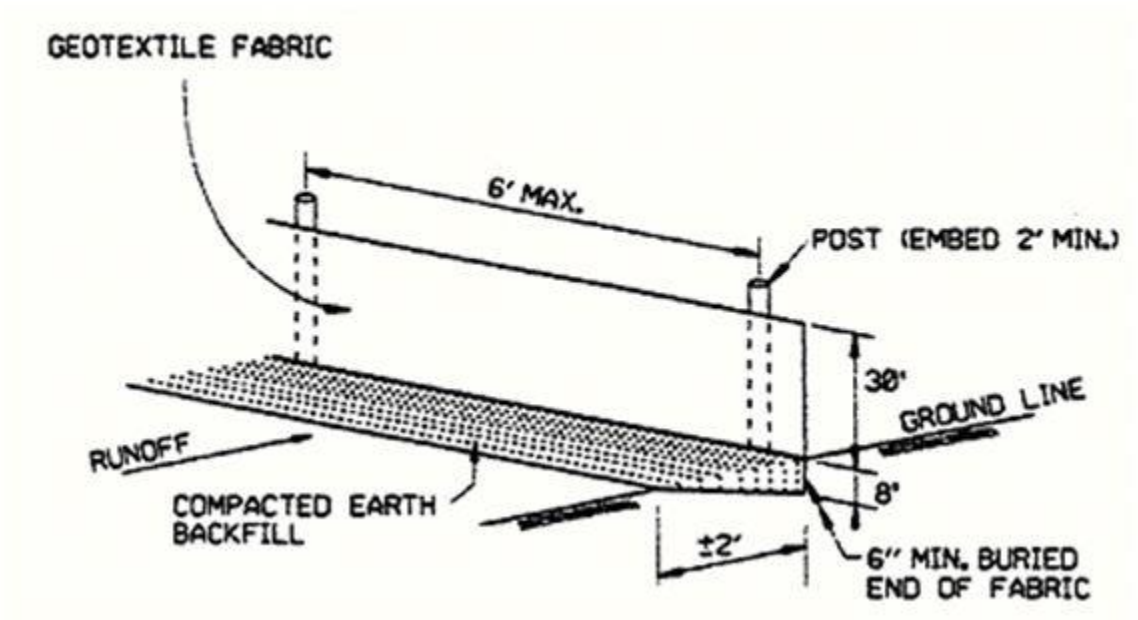

APPENDIX E – PUBLIC NOTICE SIGN TEMPLATE

4’

2’

Name of Subdivision Proposal

Public Hearing Date: Month/Day/Year

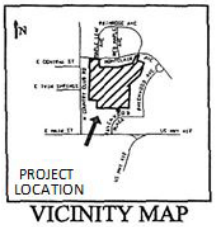

VICINITY MAP

Owner/Developer

Description of Project

Example: 40 Lots of Single Family Dwellings

Benton County- | Dept. (479) 271-1003

APPENDIX F - SIGHT DISTANCE BY DESIGN SPEED FOR SUBDIVISION STREETS

	Primary Street TYPE 1 (Residential Collector)	**Secondary Residential Street TYPE 2** (Urban)	**Secondary Residential Street TYPE 3** (Local/Suburban)	**Secondary Residential Street TYPE 4** (Local/Rural)	**Secondary Residential Private TYPE 5**	**Commercial Subdivision TYPE 6**
Residential Densities[1]	NA	>1.0 d.u./acre	0.5-1.0 d.u./acre	< 0.5 d.u./acre	< 0.33 d.u./acre	NA
Status/Sign	Public ROW Green	Public Easement Blue	Public Easement Blue	Public Easement Blue	Private ROW White	Public Easement Blue
Maintenance	County Full	County Limited	County Limited	County Limited	Private	County Limited
Typical ADT	1500<400	400<0	400<0	400<0	100<0	400<0
Right-of-Way (ft.)	50	40	40	36	33	60
Width of Pavement (ft.)	22	28	20	18	12-16[2]	32
Lane Width (ft.)	11	9	10	9	8	11
Traffic Lanes	2	2	2	2	2	2
Surface Type[3]	CC/AC	CC/AC	CC/AC	DCS	DCS/G	CC/AC
Crown (in.)	6	5	5	4	4	5
Curb and Gutter	No	Yes	Yes	No	No	Yes
Shoulder Width (ft.)	4	---	---	2	2	
Shoulder Type	Improved Gravel or Crushed Stone	---	---	Improved Gravel or Crushed Stone	Improved Gravel or Crushed Stone	---
Design Speed (mph)	25-35	20	20	20	15	25-35
Min. Sight Distance Crest Vertical Curve (ft.)	300	200	200	200	110	300
Grade (min./max.)[4]	0.5/10	0.5/10	0.5/10	0.5/10	0.5/10	0.5/6
On-Street Parking	No	Yes	No	No	No	Yes
Roadside Width	5.5 to 12	5.5-10	5.5 to 10	5.5	5.5	12

[1] Street type based on residential design density where dwelling units per acre (d.u./acre) determine said density
[2] Based on terrain.
[3] The surface type shall be chosen by the County Judge. Street construction specifications shall be in accordance with the County Road Plan as amended. Note that CC refers to cement concrete, AC refers to asphaltic concrete, and DCS means double chip and seal
[4] Up to a 15% grade may be allowed by variance for distances up to 300' with possible CC surfacing and curbs and gutters

APPENDIX F - SIGHT DISTANCE BY DESIGN SPEED FOR SUBDIVISION STREETS

	Primary Street TYPE 1 (Residential Collector)	**Secondary Residential Street TYPE 2** (Urban)	**Secondary Residential Street TYPE 3** (Local/Suburban)	**Secondary Residential Street TYPE 4** (Local/Rural)	**Secondary Residential Private TYPE 5**	**Commercial Subdivision TYPE 6**
(ft.)[5]						
Tree Lawn/Planting Strip	0-6	0-6	0/6	0-6	None	0/6
Sidewalk (No. and widths)	2 x 5’	2 x 5’	1 x 5’	No	No	1 x 5’
Street Lighting	At intersections and pedestrian scale lighting at driveways	At intersections and pedestrian scale lighting at driveways	At intersections and pedestrian scale lighting at driveways	At intersections	At intersections	At intersections and pedestrian scale lighting at driveways
Traffic Control	Stop Signs 4-Way Yield	4-Way Yield	4-Way Yield	4-Way Yield	4-Way Yield	4-Way Yield
Curb Radii (ft.)	15-25	15-25	15-25	15-25	15	15-25

[5] Includes pedestrian or bicycle facilities, drainage swale, planting strip

APPENDIX G - PRELIMINARY PLAT REVISION & APPROVAL PROCESS

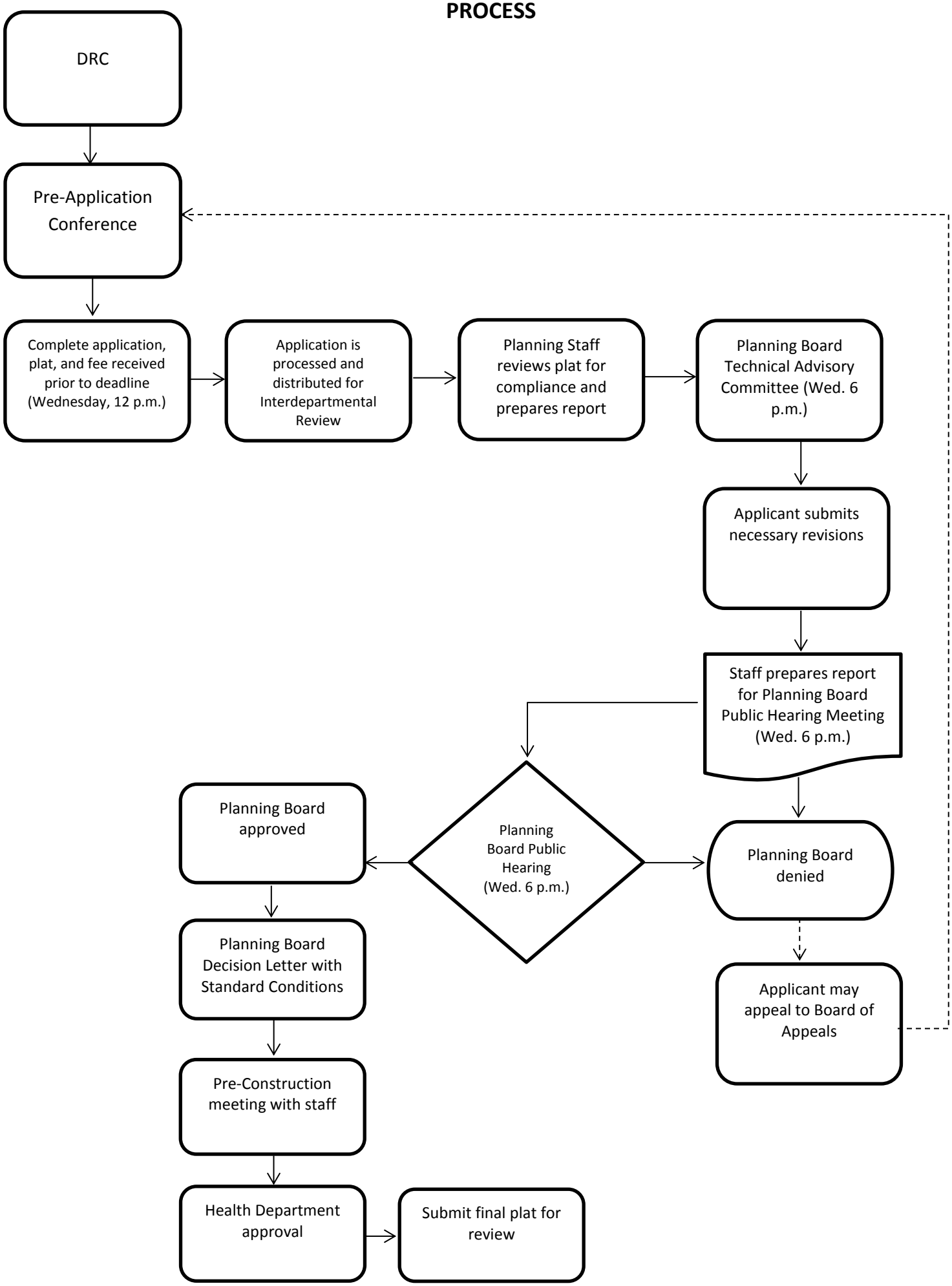

APPENDIX H - FINAL PLAT REVISION & APPROVAL PROCESS

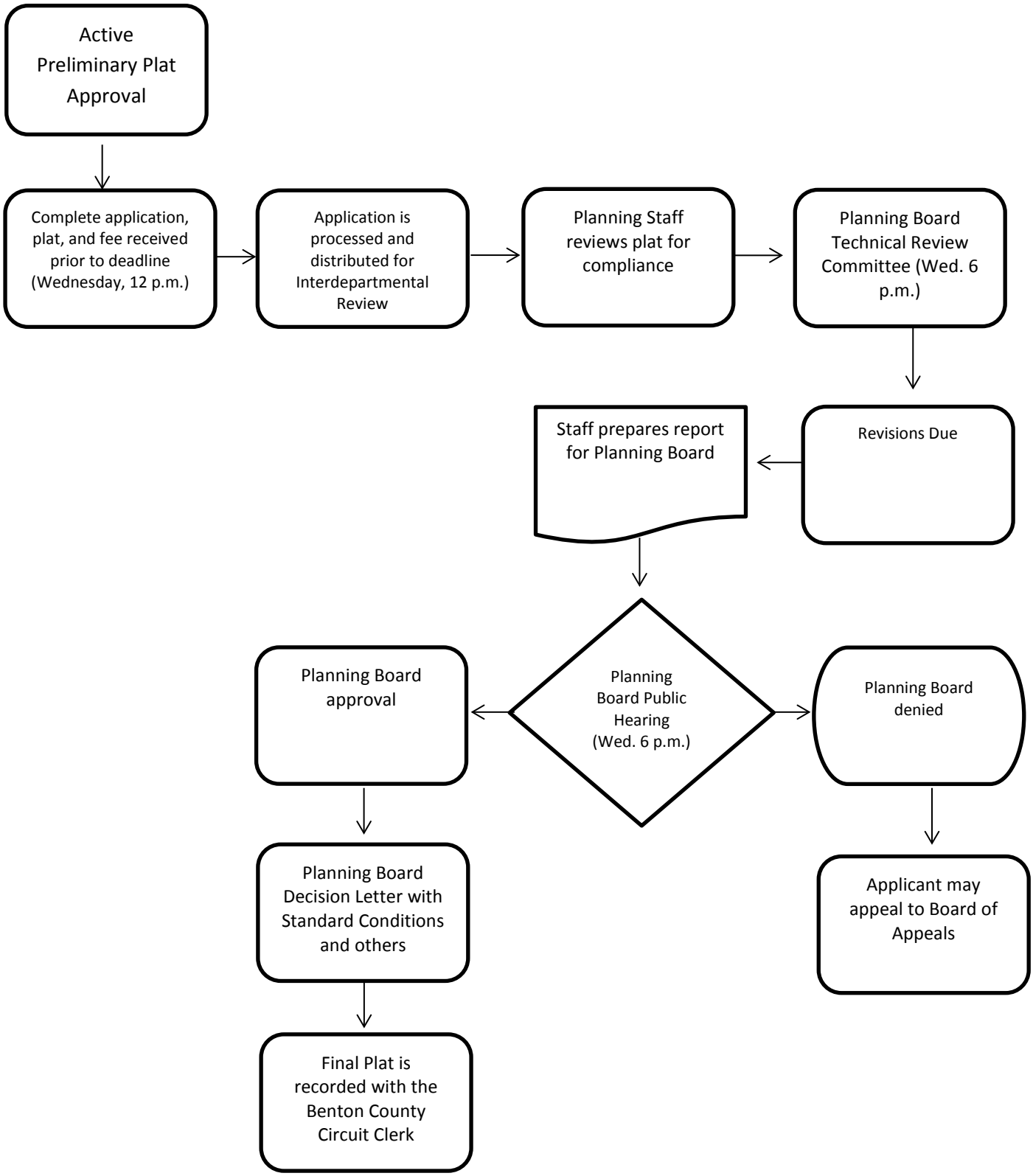

APPENDIX I - ADMINISTRATIVE APPROVAL PROCESS

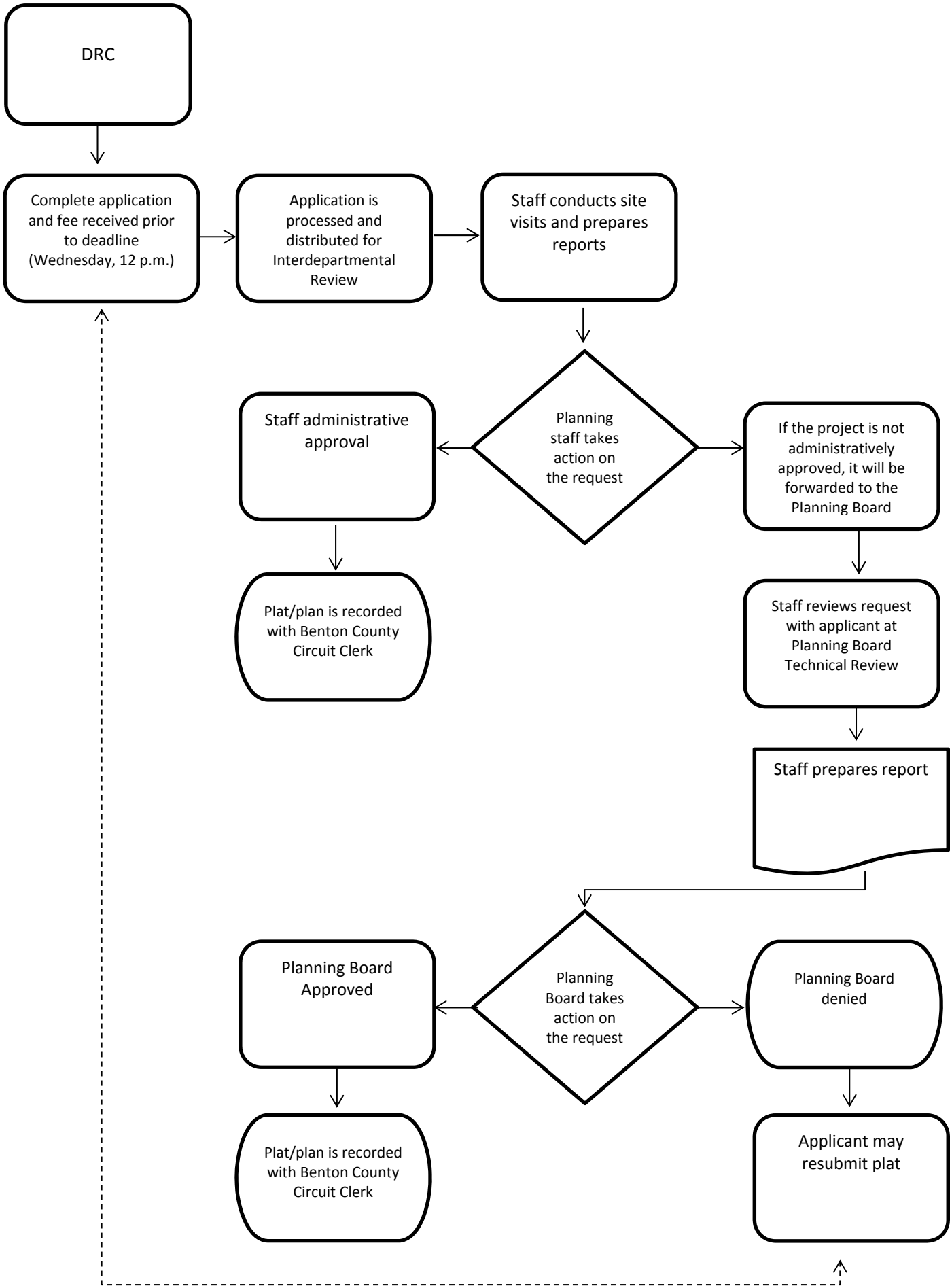

APPENDIX J – SITE PLAN REVIEW & APPROVAL PROCESS

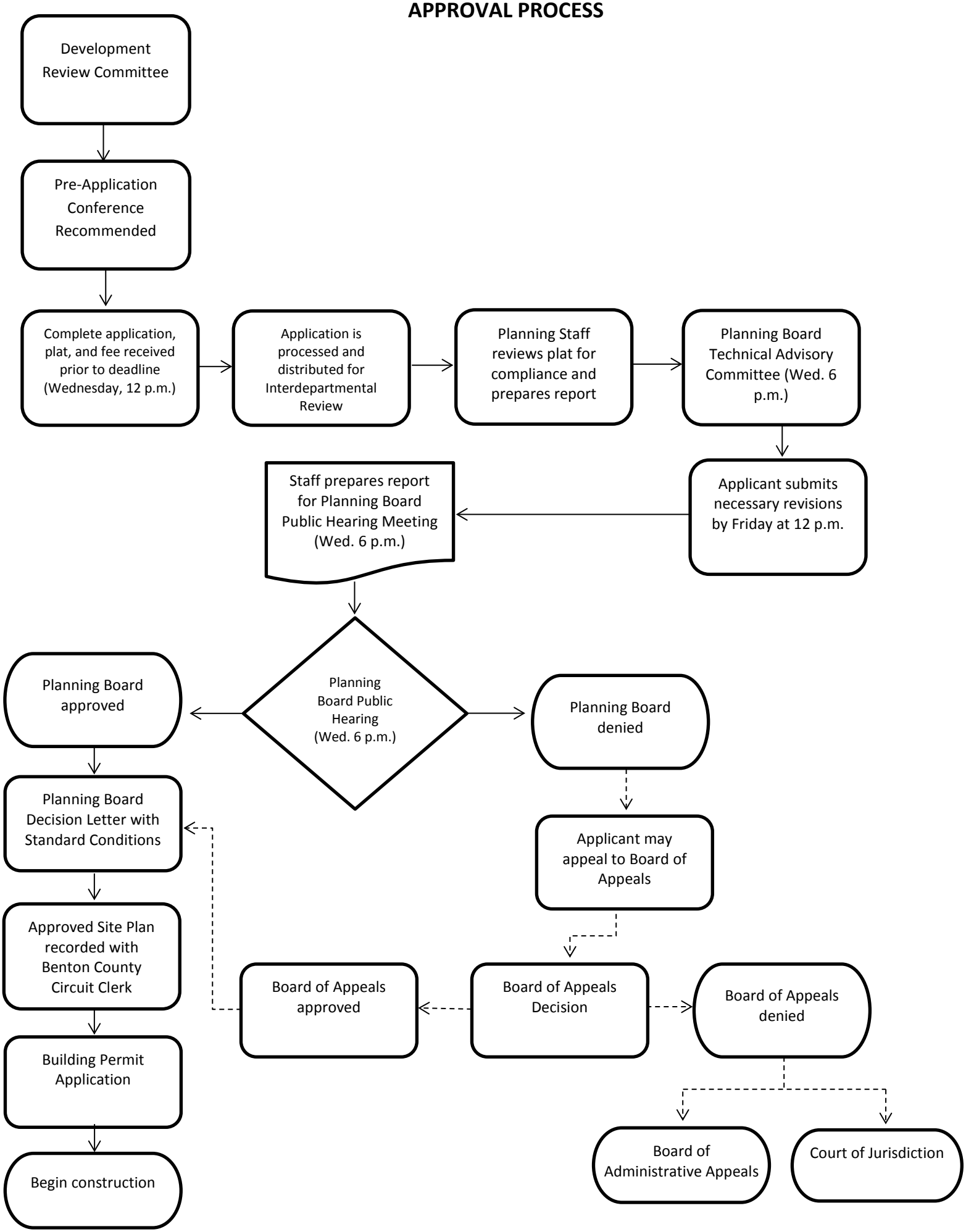

APPENDIX K - STANDARD CONDITIONS OF SITE PLAN APPROVAL

These Standard conditions of site plan approval are summarization of the Planning and Development Regulations of Benton County. It is provided solely for the convenience of the applicant/owner but does not supersede the regulations. All sections referenced herein pertain to Planning and Development Regulations of Benton County.

The following standard conditions shall be affixed to the final approved plan to be endorsed by the Planning Board:

I. **General Conditions** – All the stipulations and conditions listed herein are an integral part of the approved site plan and the owner shall agree to comply with the following stipulations. All on and off-site improvements specified in the Decision Letter and its accompanying approved site plan shall be completed as shown on the site plan, unless otherwise amended by the Planning Board:

1. **Approved Site Plans** – In accordance with §6.1, all work shall be performed and completed in accordance with the approved site plans on file with the Planning Board. The owner is responsible for complying with all applicable local (to include, but not limited to, the Planning and Development Regulations of Benton County), state, and federal rules and regulations as they may apply to the approved site plan, and thus it is the responsibility of the owner to seek and obtain all necessary approvals from other County boards, commissions, and departments as applicable, and from any state and federal agencies as applicable, and to construct the site as depicted on the approved site plan. Prior to issuance of Use and Occupancy Permits, the property owner shall contact appropriate Staff to schedule all applicable post-construction site inspections in order to verify compliance with the approved site plans.

1. **Compliance with Local and State Regulations** – In accordance with §2.1 (A), all design and construction shall comply with all applicable state and local codes. Dust control during construction shall be in accordance with state and local regulations as applicable.

2. **Landscaping** – In accordance with §4.6.16, the owner agrees to install and maintain all landscaping in accordance with the approved site plan. The owner shall maintain all required plant materials in a healthy condition and whenever necessary replace with new plant materials to insure continued compliance with landscaping and screening requirements, for the life of the site thereafter.

3. **Fencing/Screening/Buffering** – In accordance with §4.6.16 and §6.5, all proposed fences, screening or buffering features shall be installed and maintained in accordance with the approved site plan.

   The owner shall permanently maintain fences and guardrails in good repair and in a presentable appearance for the life of the use as shown on the approved site plan.

4. **Parking and loading Area** – In accordance with §6.5(3,4,5), all parking spaces, aisles, driveways, loading spaces, and fire lanes shall be clearly marked and delineated and well maintained for the life of use as shown on the approved site plan.
5. **Exterior Lighting** – In accordance with §6.5.6, all exterior lighting used to illuminate parking or storage areas or maneuvering space, or driveways, or other parts of the site subject to the approved site plan, shall be full cut off type fixtures. Further, the light poles shall be arranged and shielded to prevent direct glare from the light source into the surrounding properties.

6. **Arkansas Department of Health Requirement** – In accordance with §4.6(7,8,9) All applicable requirements of the Arkansas Department of Health shall be met as related to the approved site plan for provision of water and sewage system. In case where water from an on-site well would be used, the owner further agrees to obtain the necessary approvals from the Arkansas Department of Health.

7. **County Fire Marshal Requirements** – In accordance with §4.6.5, all requirements of the Benton County Fire Marshal shall be met as related to the approved site plan. In situations where a security gate is proposed, the applicant agrees to coordinate any use of security or electrically driven gates or other barriers to access with the Benton County Fire Marshall, prior to installation; the secured key safe (knox box) listed on the proposal also requires authorization forms from the local fire chief with a letter indicating this has been completed. Further, install locations coordinated by the same.

8. **Utilities Requirements** – All standards and requirements of the applicable public utilities and the Benton County Development Department- Building Safety Division shall be met, including but not limited to the requirement that water and electric connections, together with drainage connections, shall be made in accordance with said standards and agreement of service provided.

9. **On-site Stormwater Management** – In accordance with §4.6.10, the owner and any subsequent owners of the property shall be responsible to adhere to standard drainage system maintenance procedures in perpetuity.

   A Stormwater Permit may be required if the site is located within the urbanized area/MS4 in Benton County by submitting a complete application and fees to the Benton County Development Department. Any changes or modifications to the

drainage system shall be approved by the Planning Board and the County's Certified Stormwater Manager.

The owner shall provide contact names and phone numbers for the entities responsible for site and drainage maintenance, in case abutters have problems, or in case the County has reports of such problems, which names and phone numbers shall be affixed to the site plan prior to endorsement.

In addition, the owner agrees to install construction entrance, silt fences, concrete washout area, and other measures to minimize any impact from the construction activities as required by ADEQ prior to the issuance of construction permit. Further, all soil erosion and sediment control measures shall be in place both during and after construction on- site. Post construction BMPs shall be maintained as required. The owner also agrees to post the Notice of Coverage (NOC) on site.

10. **Public Hearing Signs** – In accordance with §4.8, the owner shall be responsible for the installation of public hearing signs. In addition, any regulatory traffic warning signs that may be required during and after the development becomes occupied by the Sheriff's Department or the Benton County Road Department and or Arkansas Highway & Transportation Department as a condition of site plan approval, shall be installed by the owner to the satisfaction of the relevant agency/department.

11. **Floodplain Requirements** – In accordance with §10.3, the owner agrees to obtain a Floodplain Development Permit if the subject lands are located within an area identified as 100-year floodplain in accordance with FEMA by submitting a complete application and fees to the Benton County Development Department.

12. **Driveway Design and Permit** – In accordance with §4.4.3 and §6.5.1, all new private driveways or other accesses connecting to a Benton County Road shall have the apron/ entrance constructed to County Road Department standards and to their satisfaction. Construction of a new access shall require a driveway permit from the Benton County Development Department.

II. **Recording Approved Site Plan:** In accordance with §6.8.11, the approved engineered site plan shall be recorded with the Benton County Recorder's office within 30 days of approval by the County Planning Board otherwise the approval is null and void.

III. **Construction Site** – The owner and/or their agent(s) shall have a copy of the Decision letter and the approved recorded site plan on site at all times when performing construction activities authorized pursuant to this Site Plan decision.

IV. **As Built Drawings** – In accordance with §4.11, upon completion of the project stipulations, if required for release of performance guarantee, a complete set of the as-

built Site Plan shall be submitted to the Planning Division. Said as-built plan shall show all of the details depicted on the approved site plan and as required per Chapter VI of the Planning and Development Regulations and the Decision Letter. The owner shall provide the Planning Division with as-built plans that show all installed utility locations. The owner and/or their agents and/or assigns shall be responsible for all data gathering for the as-built Site Plan. Said plan shall be submitted both in paper and digital format (PDF), for the Benton County Development Department- Planning Division's permanent files.

V. **Sunset Clause** – The owner shall complete all the proposed work shown on the approved site plan within two (2) years from the date of endorsement of the Site Plan unless an extension of time is granted by the Planning Board. Any such proposed work shown on the Site Plan shall be completed and fully operational within approved timelines as may be directed by the Decision Letter.

If development has not started within two (2) years it will be necessary to resubmit the entire site plan review application. If approval lapses then that portion undeveloped must be resubmitted for approval.

VI. **Future Site Plan Changes** – In accordance with §6.4, the owner agrees to review all future revisions, amendments and/or modifications to this plan with the Planning Department and obtain approval from the Planning Board in accordance with the provisions of Chapter VI of the Planning and Development Regulations of Benton County, prior to construction. Any additional development, significant change in use, or any other substantive modification to the site must file a new site plan application as applicable.

VII. The owner shall further provide all leasehold tenants with a copy of the Decision Letter, as applicable.

VIII. That the owner agrees that the approval provided by the County does not provide any warranty or guarantee for any engineering solutions or infrastructure presented as part of the project. Further, that it is the sole responsibility of the owner's engineer or consultant to ensure the effectiveness and appropriateness of the said engineering options.